Ministry of Education and Science of Ukraine
Chernihiv Polytechnic National University
Educational-scientific institute of mechanic engineering, technology and transport

PowerShape in mechanical engineering

Methodological instructions

for graphic work from the mandatory discipline
"CAD of machines and tools"
for students majoring in 133 "Industrial mechanical engineering"
for the second (master's) level of higher education full-time studies

APPROVED
at the meeting department of
Automobile Transport and Sectoral Machine Building
Protocol № 12, 16.06.2023

Chernihiv, 2023

PowerShape in mechanical engineering. Methodological instructions for graphic work from the mandatory discipline "CAD of machines and tools" for students majoring in 133 "Industrial mechanical engineering" full-time studies / compiled by V. Kalchenko, A. Kolohoida., N. Sira, H. Pasov - Chernihiv: Chernihiv Polytechnic NU, 2023. – 51 p.

Compilers: Kalchenko Volodymyr, Doctor of Technical Sciences, Professor Department of Automobile Transport and Sectoral Machine Building
Kolohoida Antonina, PhD, Department of Automobile Transport and Sectoral Machine Building
Pasov Gennadiy, PhD, Department of Automobile Transport and Sectoral Machine Building
Sira Nataliia, PhD, Department of Automobile Transport and Sectoral Machine Building

Responsible for release: Kolohoida Antonina, PhD, Department of Automobile Transport and Sectoral Machine Building

Reviewer: Volodymyr Venzheha, PhD. Department of Automobile Transport and Sectoral Machine Building

INTRODUCTION

Methodical instructions for laboratory classes from the course "CAD of machines and tools" are intended for students of technical specialties of higher educational institutions who are studying in the specialty "Industrial mechanical engineering".

The discipline "CAD of machines and tools" belongs to the cycle of professional training, it is based on previous knowledge of fundamental and professionally oriented disciplines, in particular, such as "Metalworking equipment", "Machine parts", "Higher mathematics", " Fundamentals of CAD", etc.

The task of the discipline is to acquaint students of the specialty with automated design systems (CAD) for their further use in solving design tasks, for example, in the design of machine tools and tools. Students should understand the general principles of construction and operation of CAD, as well as know the tools necessary for designing machines and tools. To acquire basic knowledge of the general principles of work and trends in the development of modern systems of automated design with the help of computer technology; to be able to use the most common domestic and foreign CAD systems.

HISTORY ABOUT THE DELCAM SOFTWARE

Delcam was founded in 1977 on the Cambridge University site. In 1997, the company became a joint-stock company, and its constant development is due to the demand for software. Currently, the company is the largest developer of software for modeling and production of products. Delcam software is used by more than 45,000 organizations in more than 80 countries around the world.

The Delcam company is one of the world's leading manufacturers of progressive CAD/CAM solutions for the manufacturing industry. Delcam's software covers all areas of production, from modeling to precision control of the finished product, providing fully automated CAD/CAM solutions to support and ensure concept-to-reality.

One of the main representatives of the Delcam software is the PowerShape package - a modern modeling package with solid and surface modeling. Surface modeling is the strongest point of the PowerShape package. The package automatically suggests the most appropriate way to build the surface. At the same time, the user at any stage has the opportunity to independently set the construction method and parameters he needs.

Delcam PowerMill is a package for preparing high-performance control programs for CNC milling machines. It allows you to increase the productivity of the machines and, at the same time, achieve the highest quality in the manufacture of parts and equipment. Delcam PowerMill is traditionally considered the best system for preparing control programs for milling of products of complex shape.

Delcam PowerInspert is an accuracy control system using 3-coordinate control and measuring machines and manipulators. Combining the advantages of a wide range of capabilities and ease of use, it allows you to control complex details by comparing them with the original computer models created in the CAD system. Delcam PowerInspert allows you to control both complex free-form surfaces (showing the deviation of any measured points from the computer model)

and geometric elements of the correct shape, control equipment, scan prototypes to create computer models.

Delcam ArtCAM is a software package for spatial modeling and mechanical processing, which allows you to automatically generate spatial models from a flat drawing and obtain products based on them on CNC machines. ArtCAM offers a powerful, easy-to-use set of modeling tools that gives the designer the freedom to create complex spatial reliefs.

A powerful representative of the Delcam family of software products is the FeatureCAM system. This is a system for preparing control programs based on automatic recognition of typical elements. The technology of automatic recognition of processing elements has become extremely popular among customers of small and medium-sized businesses, allowing to make the development of programs for CNC machines as fast and simple as possible.

The Delcam software line includes a specialized solution for the shoe industry - Delcam Crispin, which allows you to solve the design, decoration and manufacturing tasks of all types of shoes. Delcam also offers a specialized solution for dentists. This solution is based on an open system consisting of two modules. Delcam DentCAD is a specialized system for modeling dental bridges and crowns. Delcam DentMill is a specialized system for manufacturing dental bridges and crowns on CNC machines.

FeatureCAM comprises several modules, which enable you to perform different functions. This help file documents the entire product family, so, to differentiate between the features specific to individual products, the titles of help topic titles are followed by product codes in parentheses. The codes are:

(25D) – requires a minimum of the 2.5D Milling product.

(3D LITE) – Requires a minimum of the 3D Lite product. The functionality is also available in the 3D MX and 3D HSM products. 3D Lite is an entry-level 3D product, which enables you to mill only one surface per feature, but you can create multiple features. The strategies available in 3D Lite are Z-level rough, Parallel rough, Parallel finish, Isoline, and 2D spiral.

(3D MX) – Requires a minimum of the 3D MX product. The functionality is also available in the 3D HSM product. 3D MX is a mid-level 3D product that enables you mill multiple surfaces. It has the same strategies as 3D Lite, plus Z-level finish, Radial finish, Flowline finish, Four-axis finish, Horizontal + vertical, Between curves, and Swarf milling.

(3D HSM) – Requires a minimum of the 3D HSM product. 3D HSM is a high speed machining product with the same strategies as 3D MX, plus Pencil, Plunge roughing, Remachine, Steep and Shallow, and Spiral 3D.

(REC) – Requires the FeatureRECOGNITION product.

(MSIM) – Requires the Machine Simulation product.

(5AP) – Requires the 5-axis Positioning product.

(5AS) – Requires the 5-axis Simultaneous product.

(TURN) – Requires the Turning product.

(TURNMILL) – Requires the Turn/Mill product.

(WIRE) – Requires the Wire EDM product.

(TOMB) – Requires the Tombstone product.

(SOLID) – Requires the Solid Modeling product.

(MTT) – Requires the Advanced Turn/Mill (MTT) (Multi-turret turning) product.

(SND) – Requires the shared Network Database product.

TASKS FOR CALCULATION AND GRAPHIC WORK

The purpose of performing the calculation and graphic work: familiarization with the environment of the Delcam PowerShape. Learning tools for creating flat and spatial elements.

Graphic work conventionally consists of 3 tasks:

1. Work with flat primitives.

2. Work with simple spatial elements

3. Creation of spatial models of node details and their combination into an assembly drawing.

The main goal of the 1st part of the work is to study the basic commands of the toolbar "Lines", "Arcs", "Coordinate systems", "Annotations" and "Basic editing commands". In the process of performing the work, the student must learn to create objects such as arcs, lines, be able to apply dimensions to drawings and perform elementary commands for editing objects.

In the first part of the work, it is necessary to make sketches for three parts such as a lever, a disk and a plate.

Variants of tasks are given in appendices A, B, C, Art. 10, 11, 19.

An example of the task is given in Appendix F, Art. 38, 39, 40.

The main purpose of the 2nd part is to study the commands of the "Bodies", "Curves", "Properties" tool panels. In the process of performing the work, the student should learn to more freely use the set of commands of the "Arks", "Lines" tool panel. To fully master the general editing commands of flat and solid primitives. Be able to create simple bodies using standard primitives and contour drawing commands. To study the peculiarities of using Boolean operations.

According to the individual option, create 3D models of parts such as "Lever", "Disc", "Plate" and "Hull" in the Delcam PowerShape system.

Variants of tasks are given in Appendix A, B, C, D of Art. 10, 11, 19, 27.

An example of the task is given in Appendix F, Art. 41, 42, 43, 44.

The main purpose of the 2nd part is to study the commands of the "Bodies", "Curves", "Properties" tool panels. In the process of performing the work,

the student should learn to more freely use the set of commands of the "Arks", "Lines" tool panel. To fully master the general editing commands of flat and solid primitives. Be able to create simple bodies using standard primitives and contour drawing commands. The main purpose of Part 3 is to study the commands of the "Elements" toolbar. In the process of performing the work, the student must learn to determine the optimal way to create a model of complex parts. Know and be able to use different modeling methods. Also learning the Compose toolbar commands. Mastering the basic principles of the assembly model. In the process of performing the work, the student must learn to create a new assembly, add new elements to it, and determine the relative location of parts using anchors.

In the Delcam PowerShape system, create all parts, including standard products, according to the given assembly drawing. Create an assembly model of the node by combining previously created three-dimensional models of parts. You will render the three-dimensional model of the node.

Typical variants of tasks are given in Appendix E, Art. 35. Additionally, assembly drawings can be selected from any special publication.

An example of the task is given in Appendix F, Art. 44-50.

RECOMMENDED BOOKS

1. PowerShape 7080. Учебный курс. 2006, с. 246.

2. Chang, C.C. (2004). Direct slicing and G-code contour for rapid prototyping machine of UV resin spray using PowerSOLUTION macro commands. Int J Adv Manuf Technol 23, 358–365 https://doi.org/10.1007/s00170-003-1575-4.

3. Delcam. PowerSHAPE. Учебный курс/ Delcam. 2006. – 120 с.

4. http://www.delcam.in.ua/

5. https://www.autodesk.com/products/powershape/overview

6. Yakushenko, S.O., Nosov, P.S. (2013). Proektni rozrakhunky ta 3D modeliuvannia dvyhuniv vnutrishnoho zghoriannia u SAPR Delcam PowerShape. [Design calculations and 3D modeling of internal combustion engines in CAD Delcam PowerShape] Inform. tekhnolohii v osviti, nautsi ta vyr-vi. 4 (5). 165-179 http://dspace.opu.ua/jspui/handle/ 123456789/2687

7. Kuang-Hua Chang (2013) Product Performance Evaluation using CAD/CAE.

8. Kuang-Hua Chang (2016). e-Design.

9. Kuang-Hua Chang (2014). Product Design Modeling using CAD/CAE.

ADDITION A

VARIANTS OF TASKS OF "LEVER" TYPE PARTS

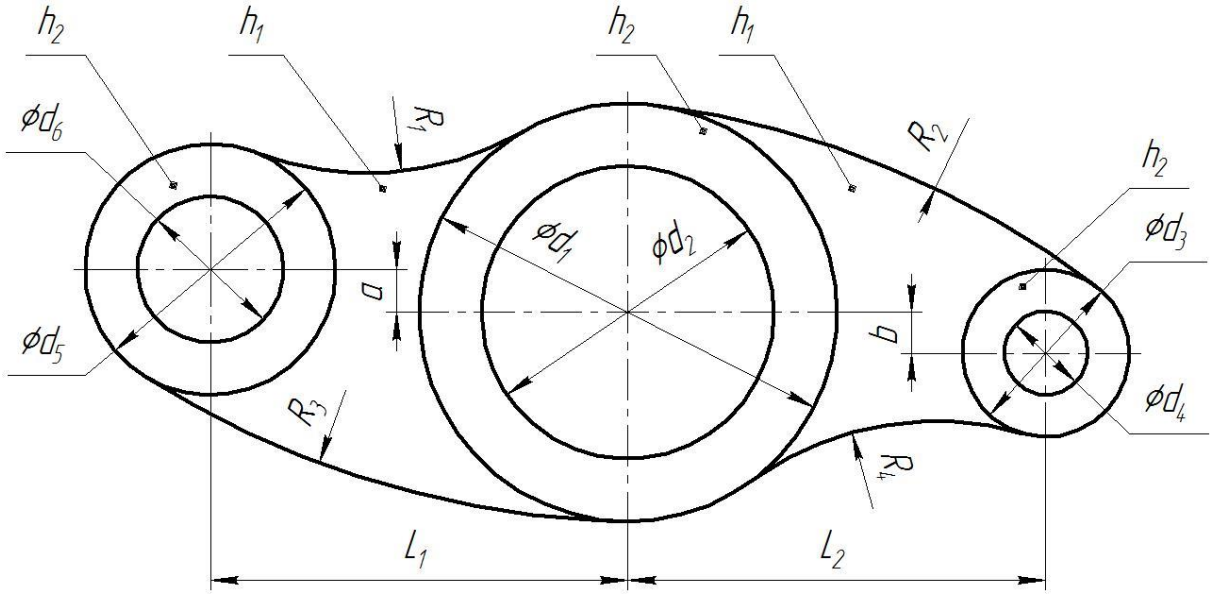

№ var.	L_1, mm	L_2, mm	a, mm	b, mm	R_1, mm	R_2, mm	R_3, mm	R_4, mm	d_1, mm	d_2, mm	d_3, mm	d_4, mm	d_5, mm	d_6, mm	h_1, mm	h_2, mm
1	100	100	10	10	75	225	225	75	100	70	40	20	60	35	12	25
2	100	125	10	20	55	240	200	65	100	70	40	20	70	40	15	30
3	125	125	20	20	55	240	240	65	125	70	55	35	70	40	14	35
4	100	110	20	20	55	240	240	65	110	80	40	25	65	40	10	25
5	100	110	15	30	40	250	200	80	110	80	40	25	65	40	15	25
6	90	80	15	30	80	250	170	80	95	70	40	25	50	30	12	25
7	100	80	15	30	80	250	220	100	95	65	50	25	50	30	20	35
8	100	80	10	25	100	230	220	100	95	65	50	25	40	15	8	20
9	100	90	10	25	100	230	220	100	95	65	65	40	40	15	14	28
10	115	100	15	15	90	200	200	70	100	80	55	30	40	15	15	25
11	115	90	10	15	95	180	230	95	100	65	65	40	40	15	6	15
12	120	115	20	30	115	250	200	75	115	80	70	50	60	40	10	25
13	115	110	15	25	70	170	190	80	95	55	55	35	55	30	14	30
14	115	110	10	20	90	210	210	90	100	80	70	40	60	45	16	35
15	100	115	15	10	70	200	200	70	115	75	55	30	50	25	18	40

ADDITION B

VARIANTS OF TASK DETAILS OF TYPE "DISK"

Variant 1

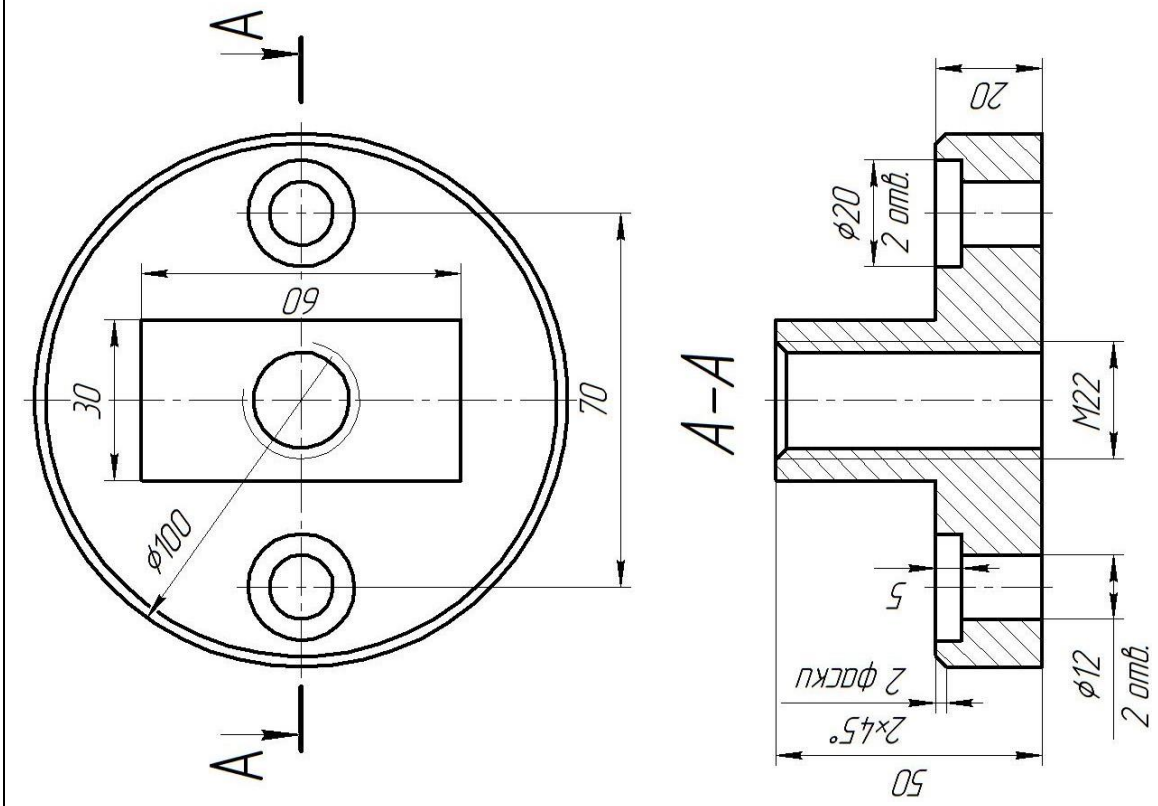

Variant 3	Variant 2
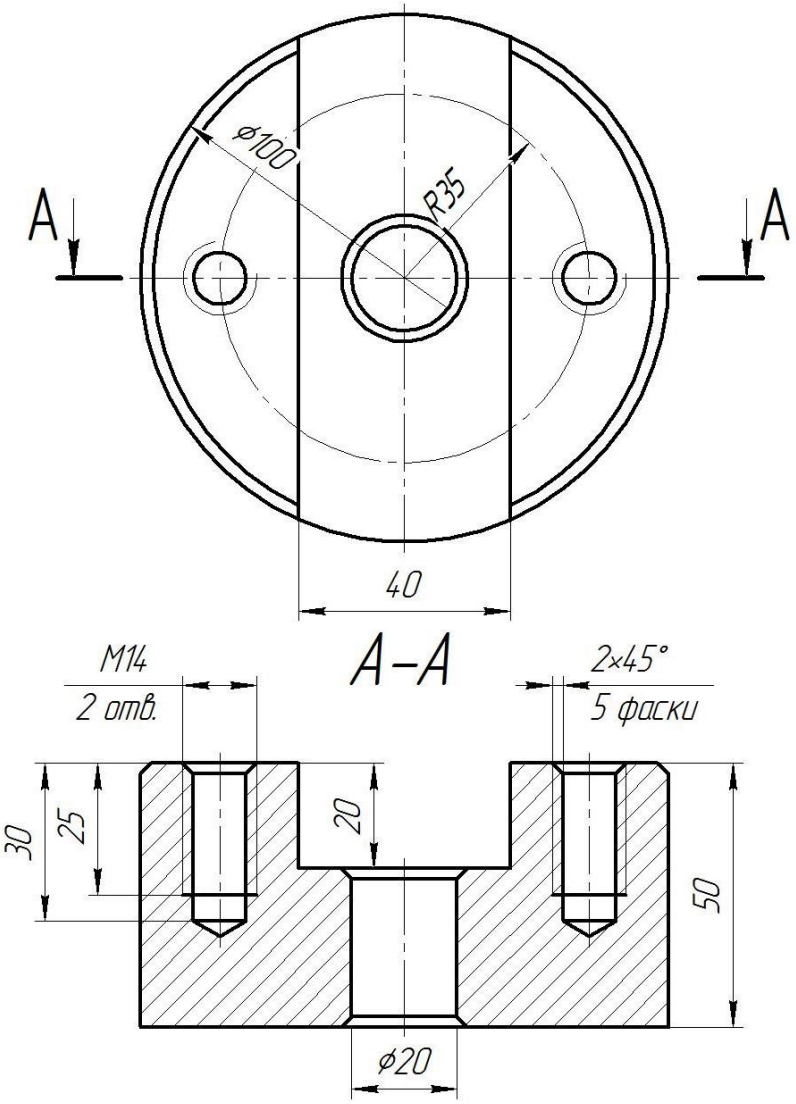	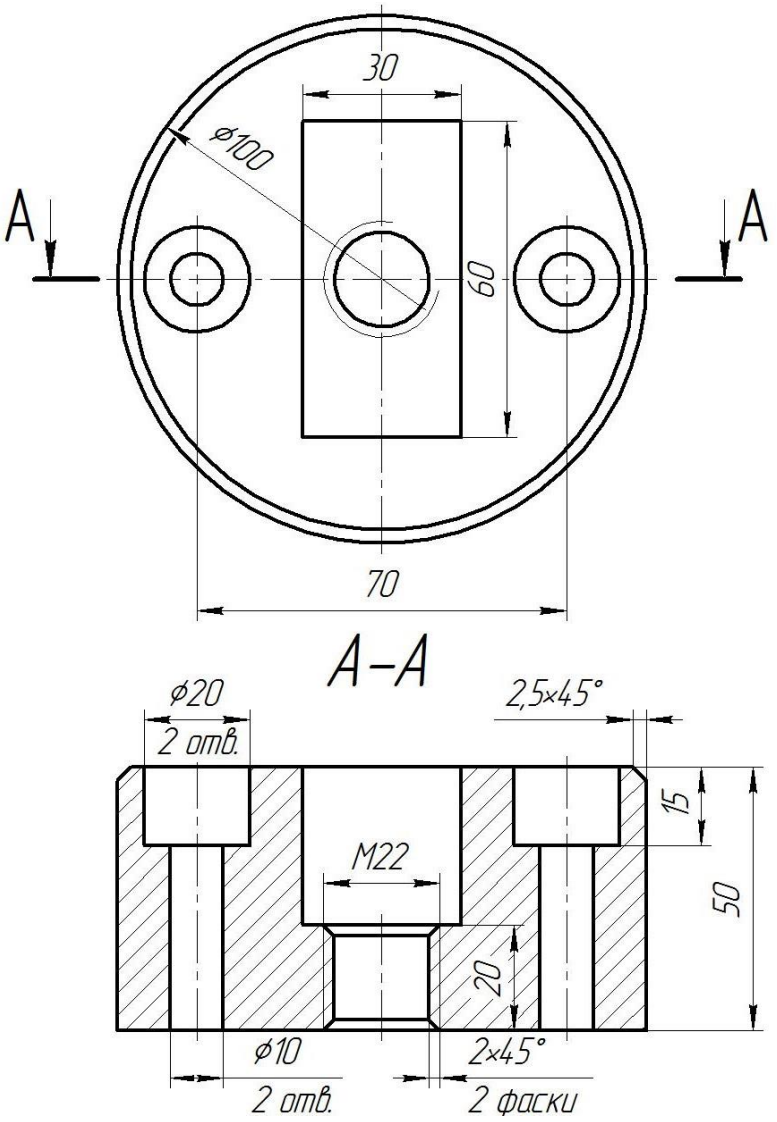

Variant 4

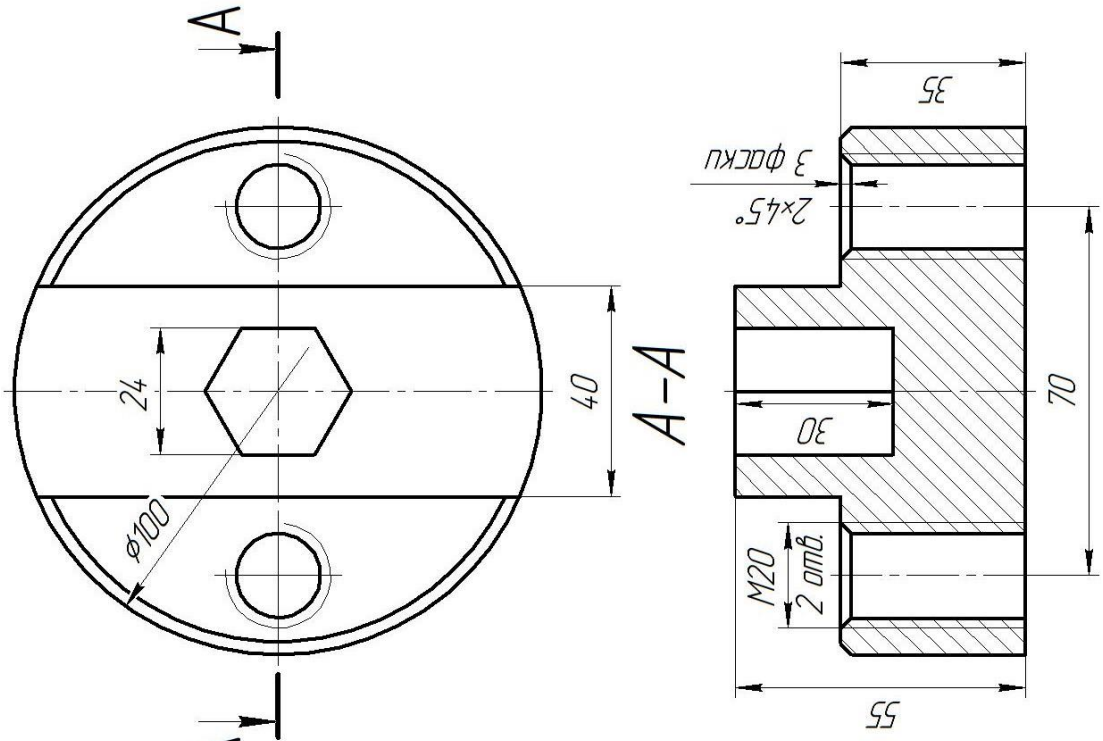

Variant 5

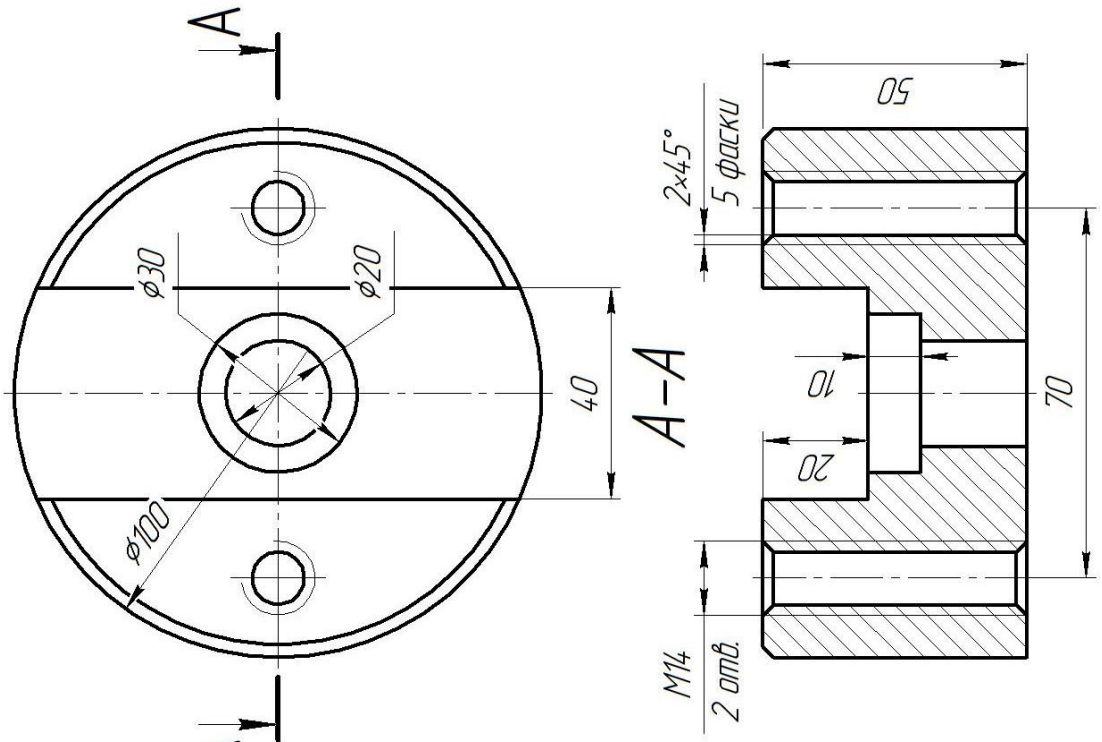

Variant 7	Variant 6
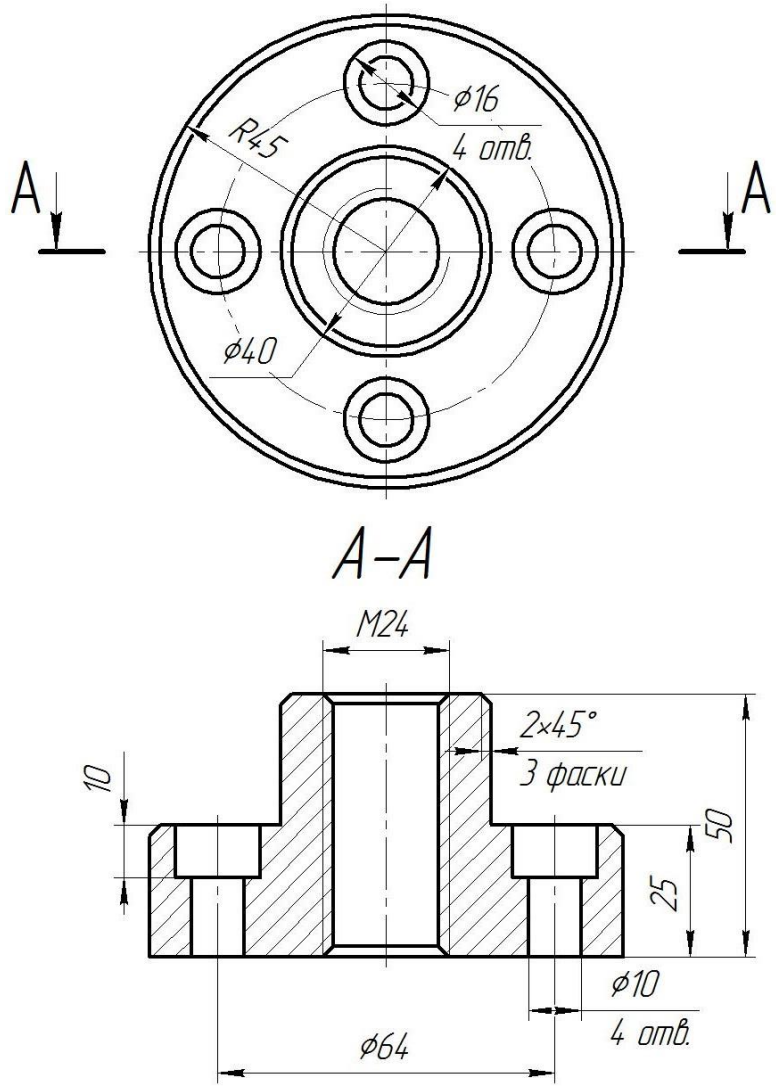	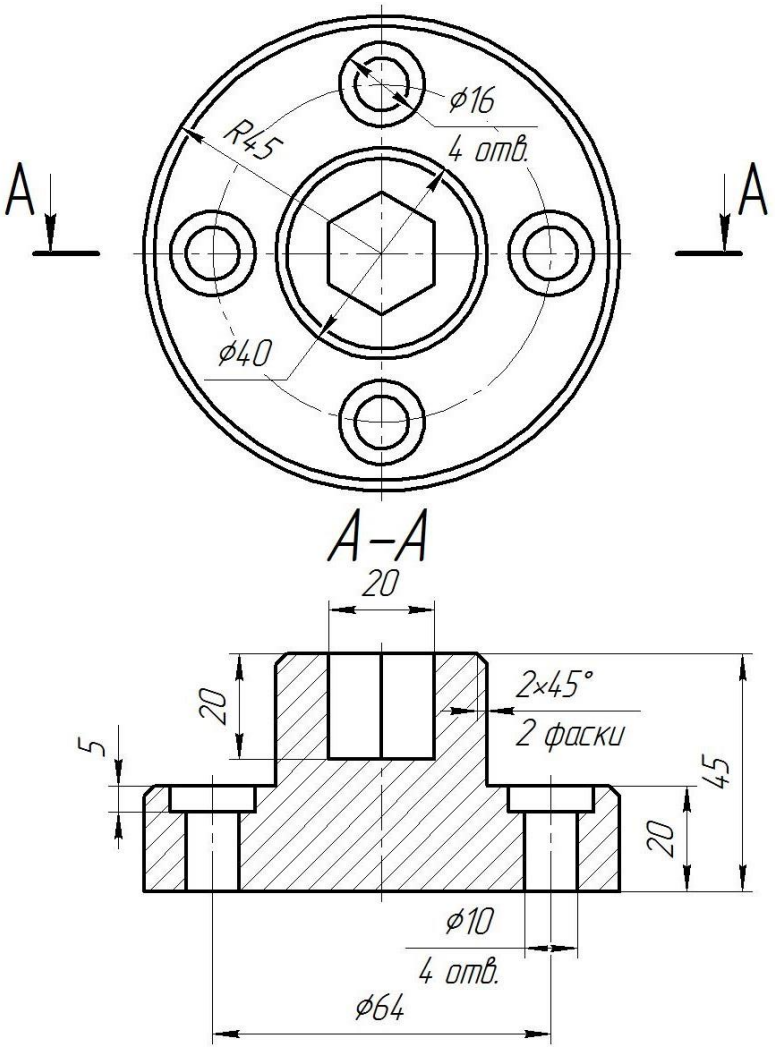

Variant 8	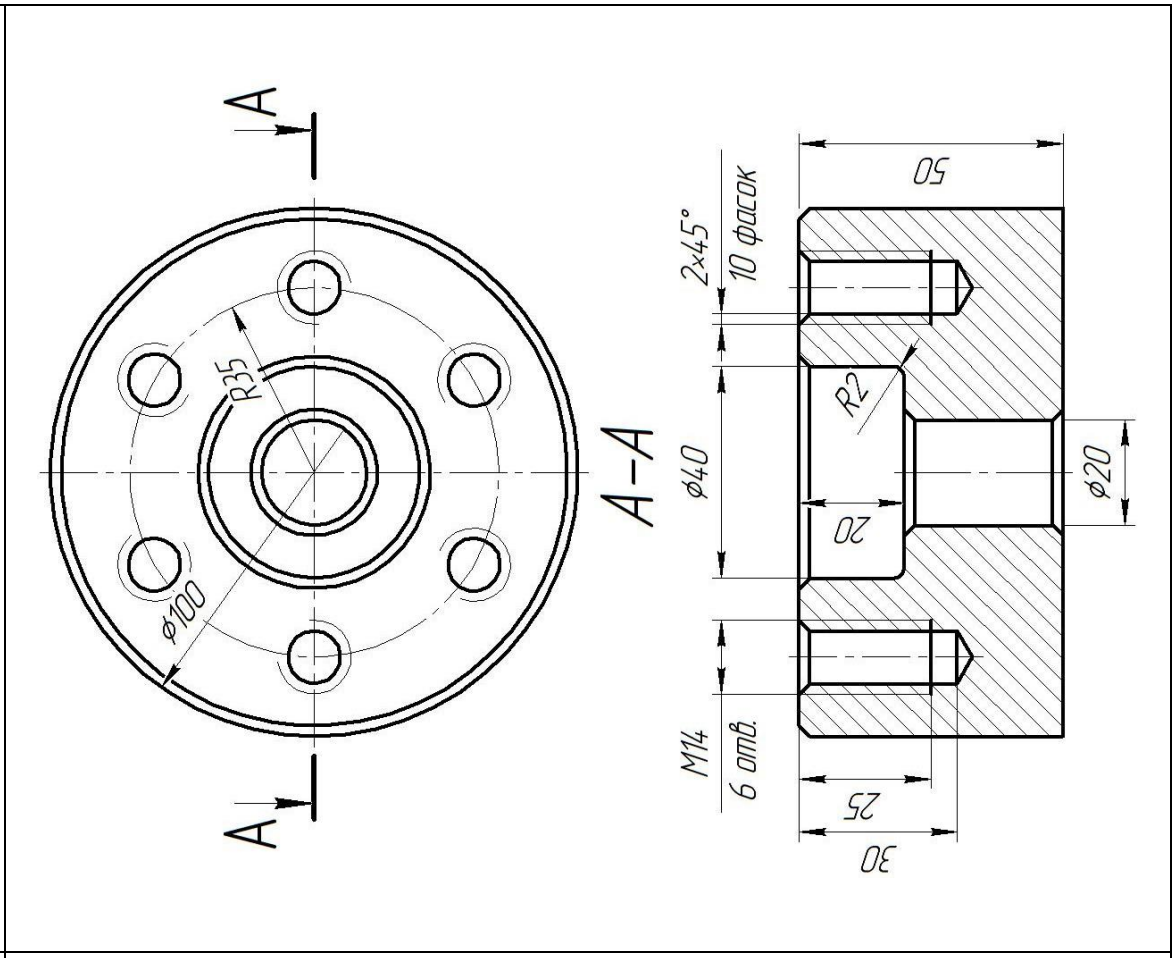
Variant 9	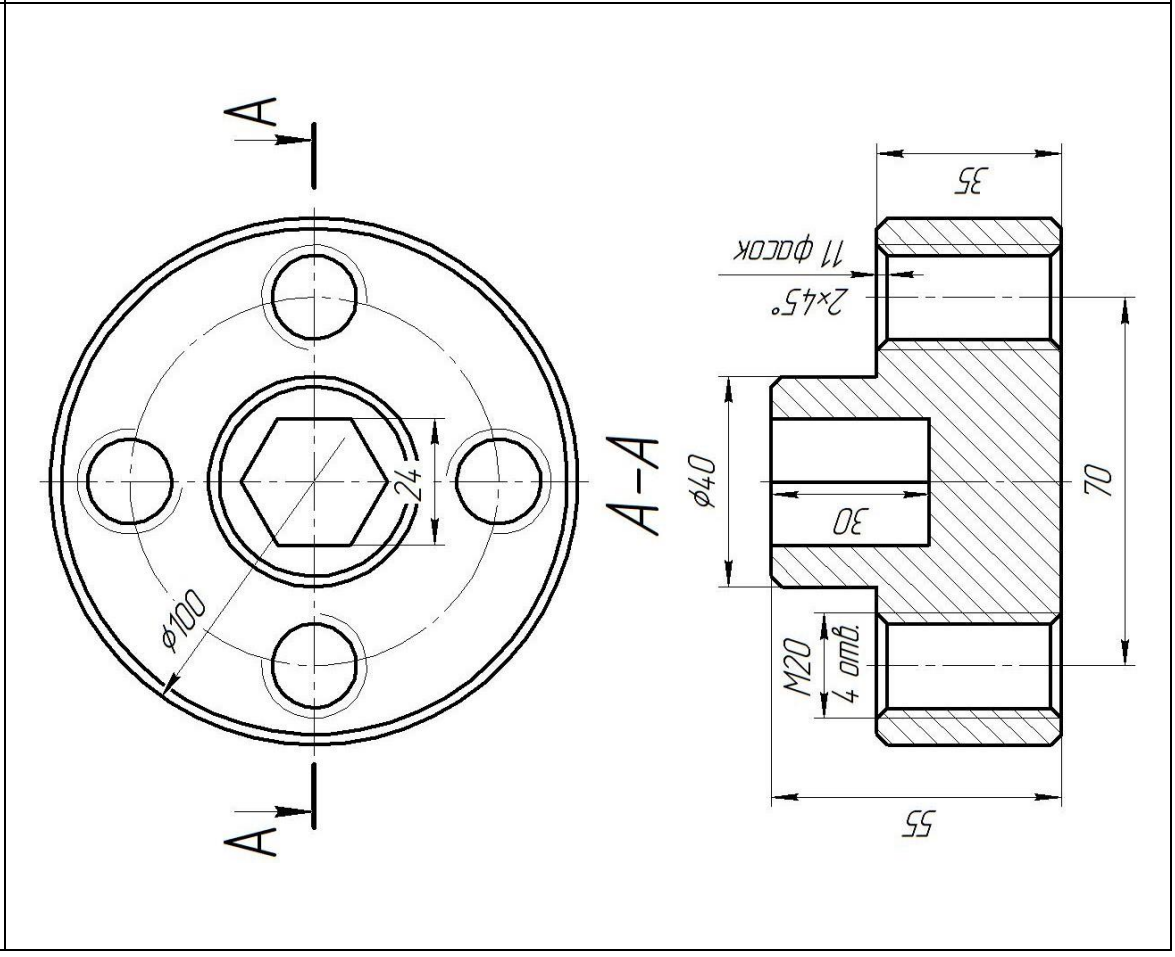

Variant 10	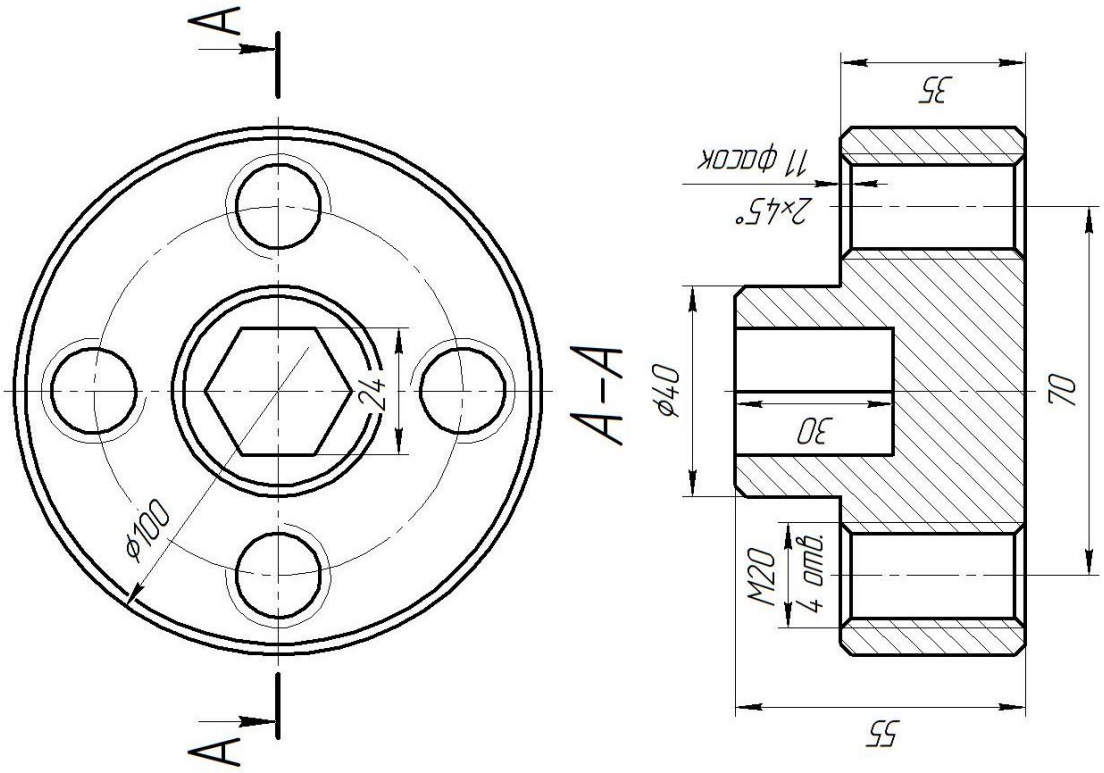
Variant 11	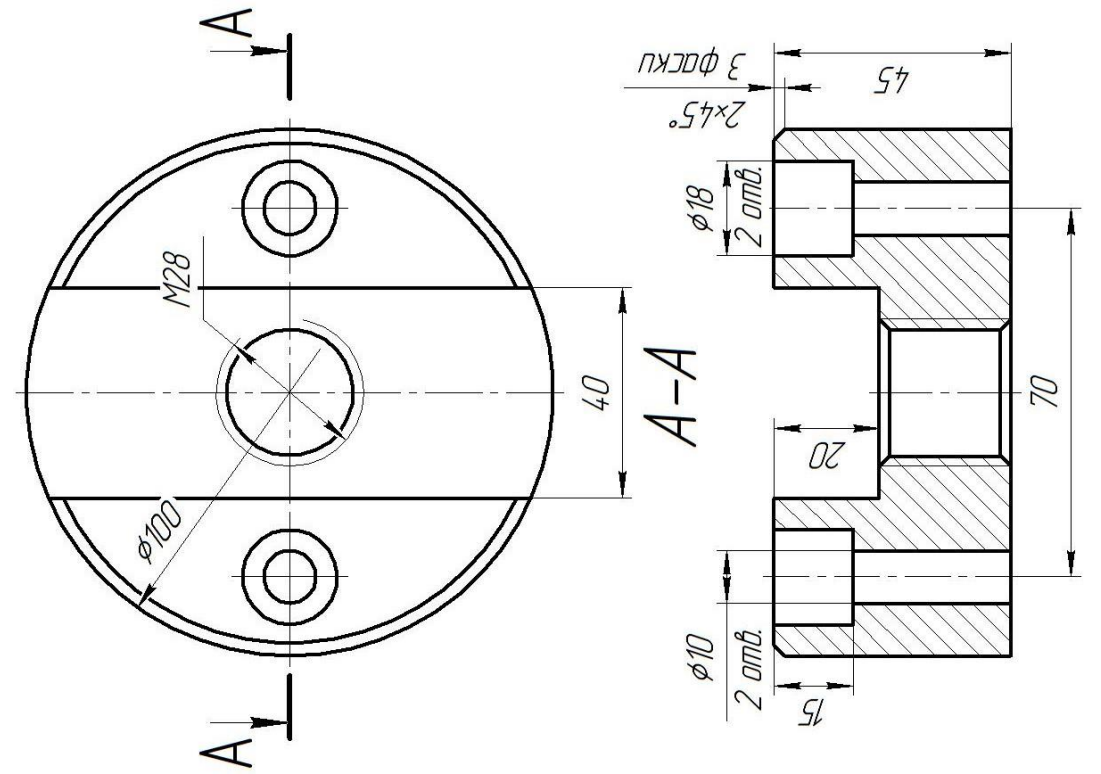

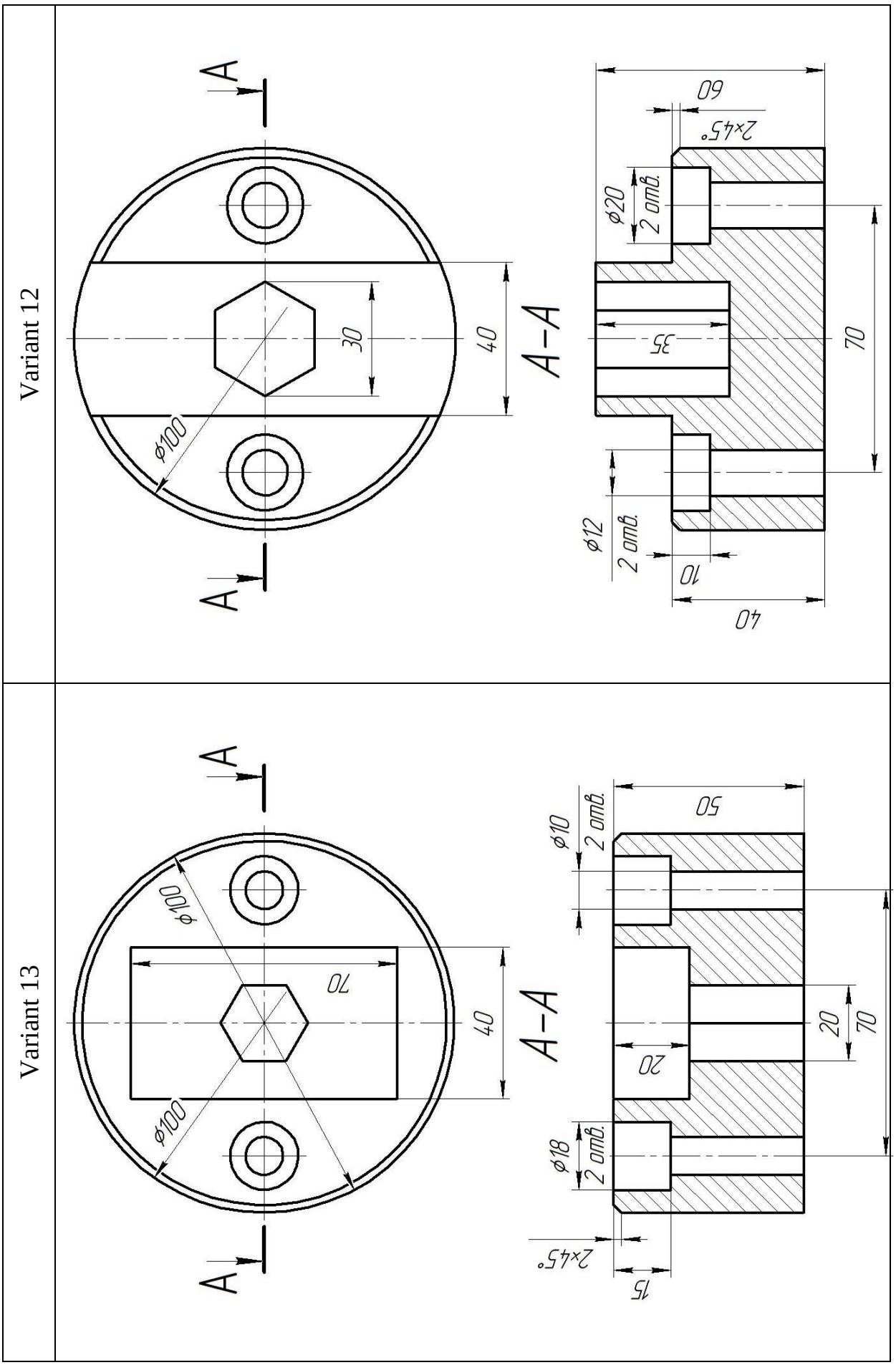
Variant 12
A
A
30
40
ϕ100
A–A
60
2×45°
ϕ20
2 отв.
35
70
ϕ12
2 отв.
10
40
Variant 13
A
A
ϕ100
70
40
ϕ100
A–A
ϕ10
2 отв.
50
20
20
70
ϕ18
2 отв.
2×45°
15

Variant 15	Variant 14
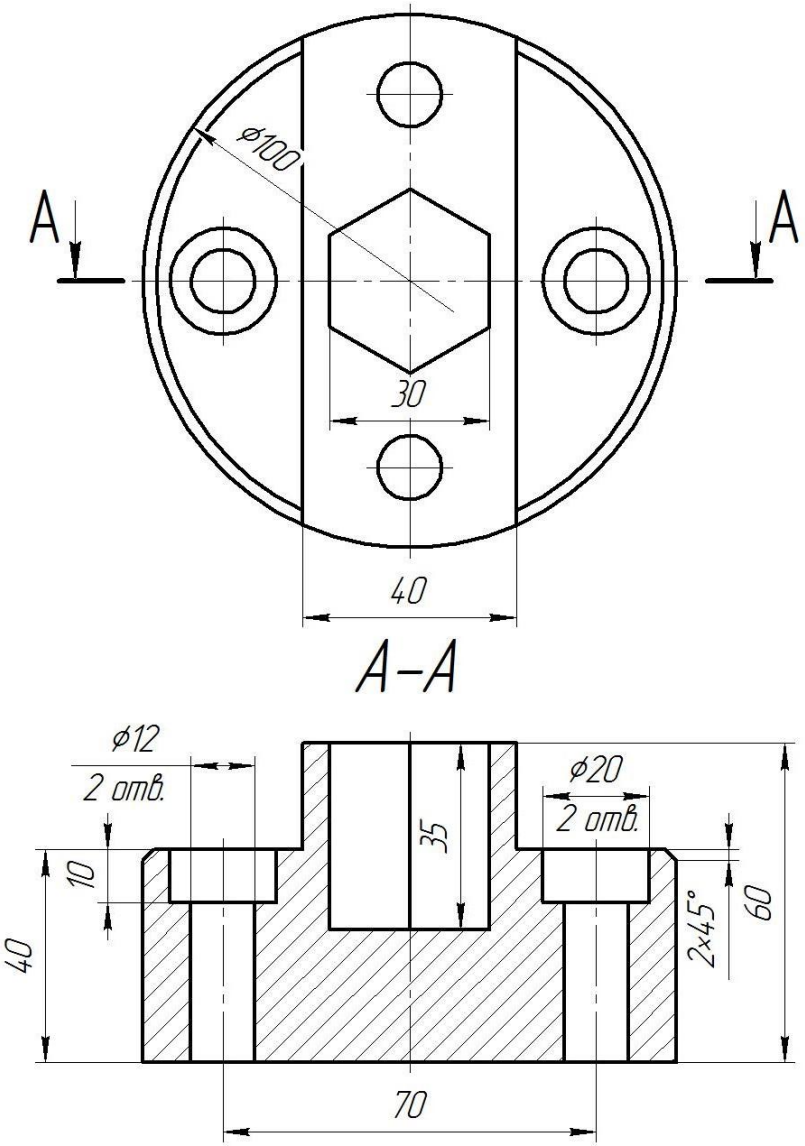	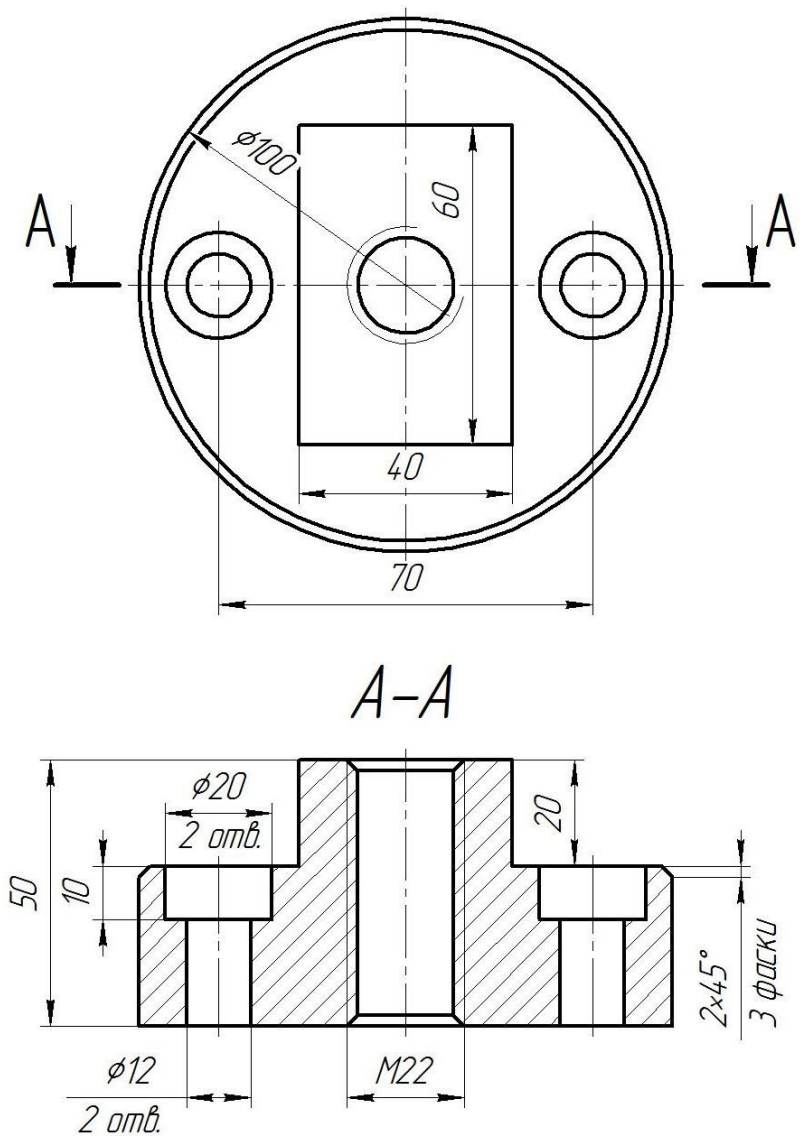

ADDITION C

VARIANTS OF TASKS OF PARTS OF THE "PLATE" TYPE

Variant 1

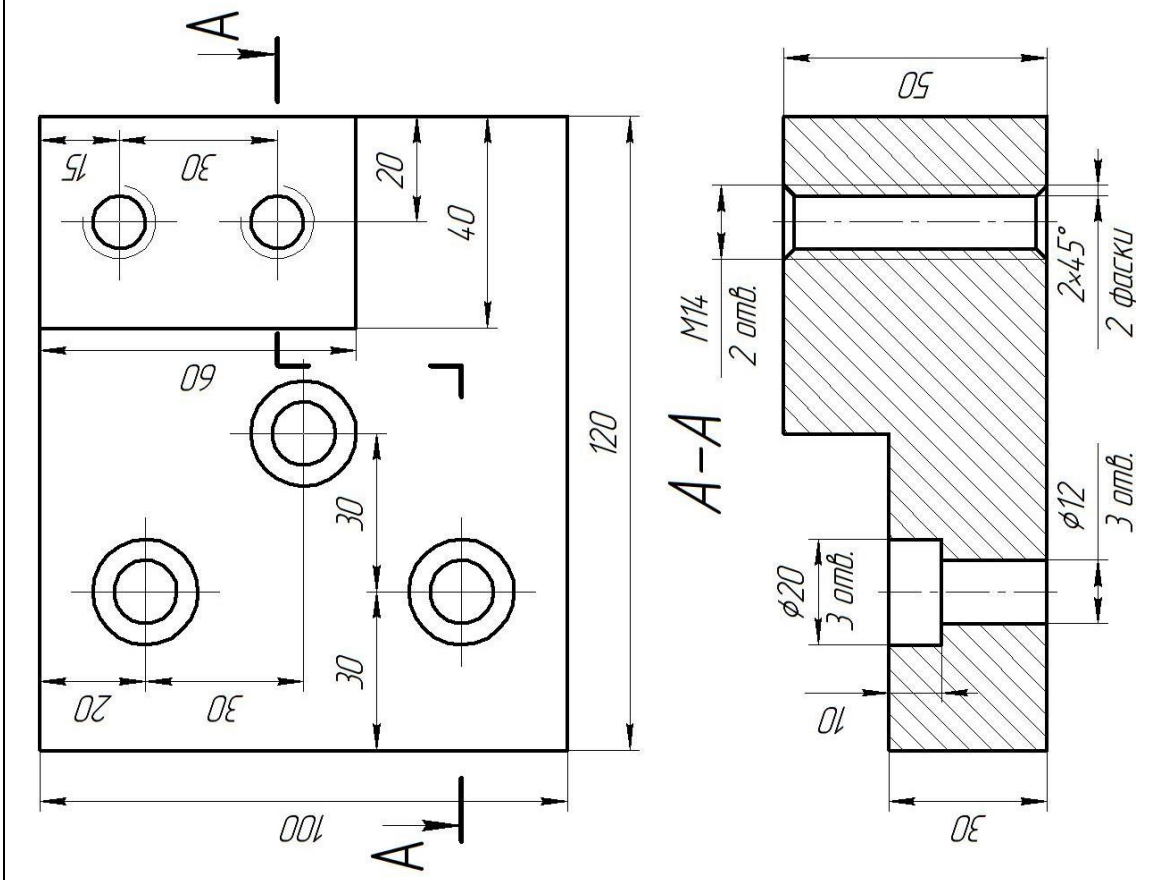

Variant 2

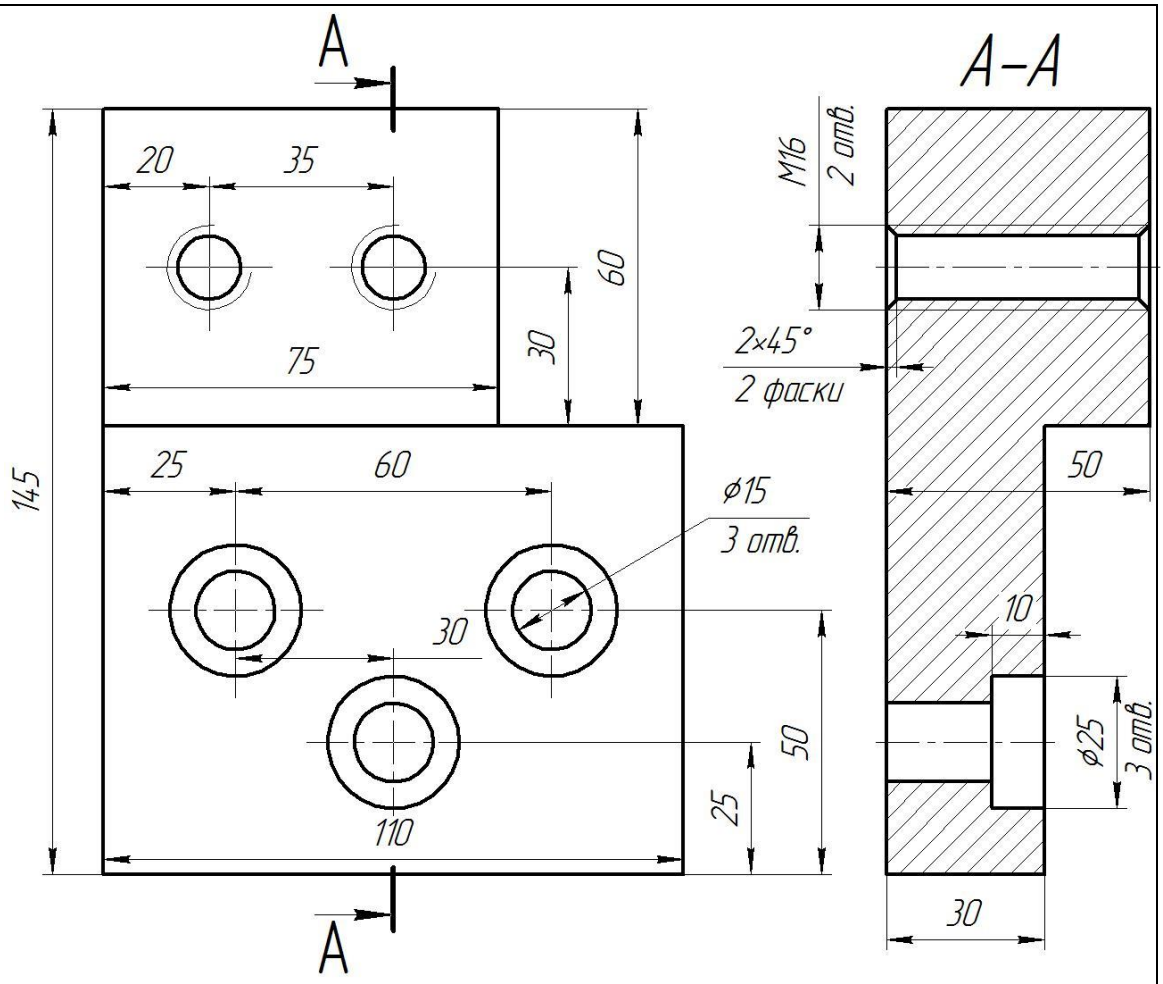

Variant 3

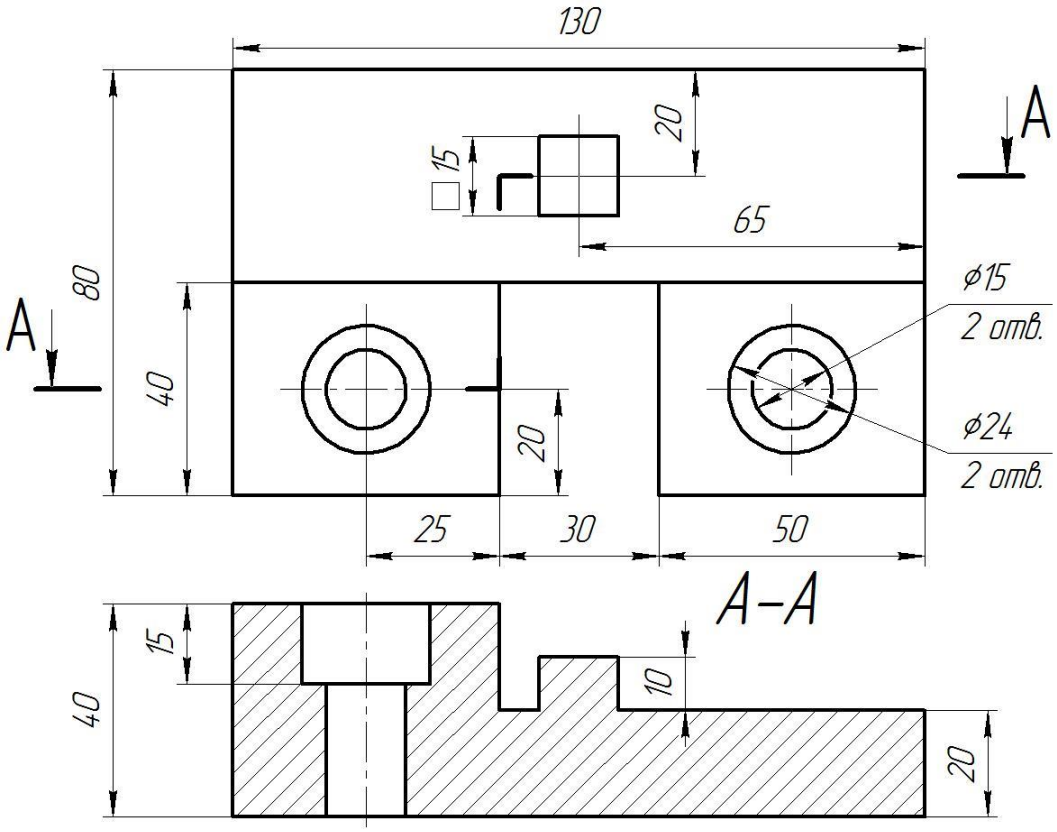

Variant 4

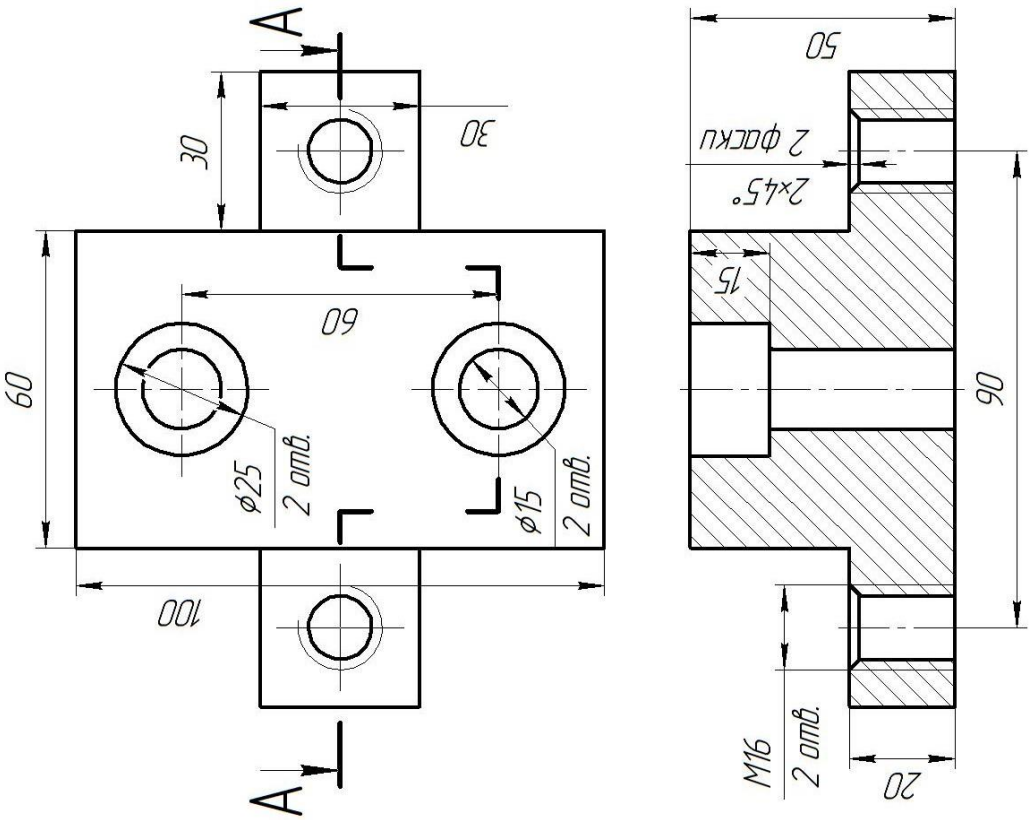

Variant 5

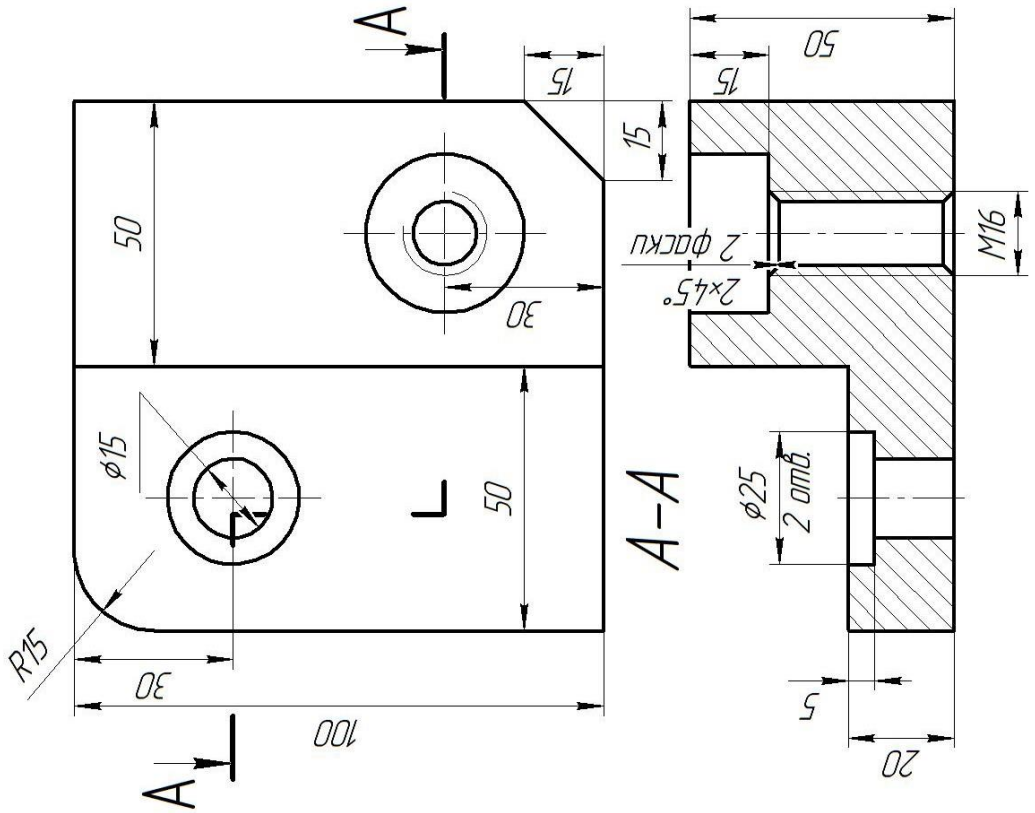

Variant 6

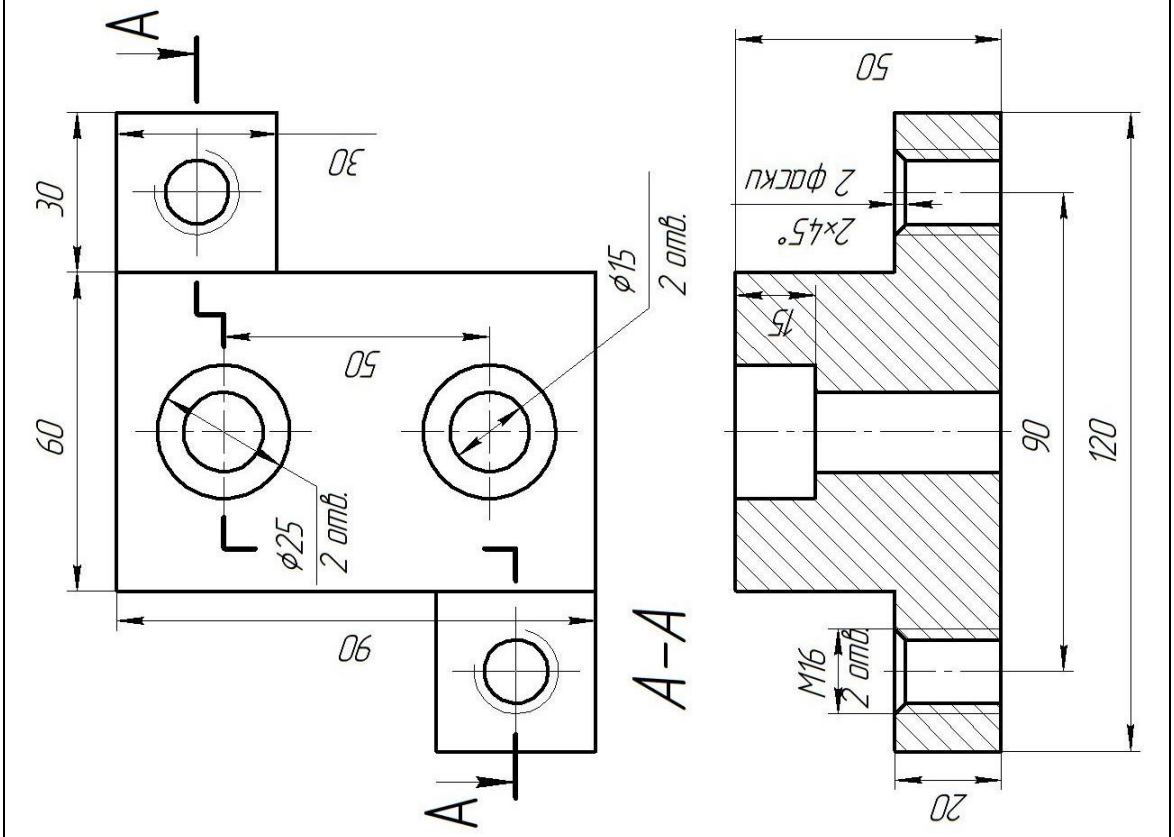

Variant 7

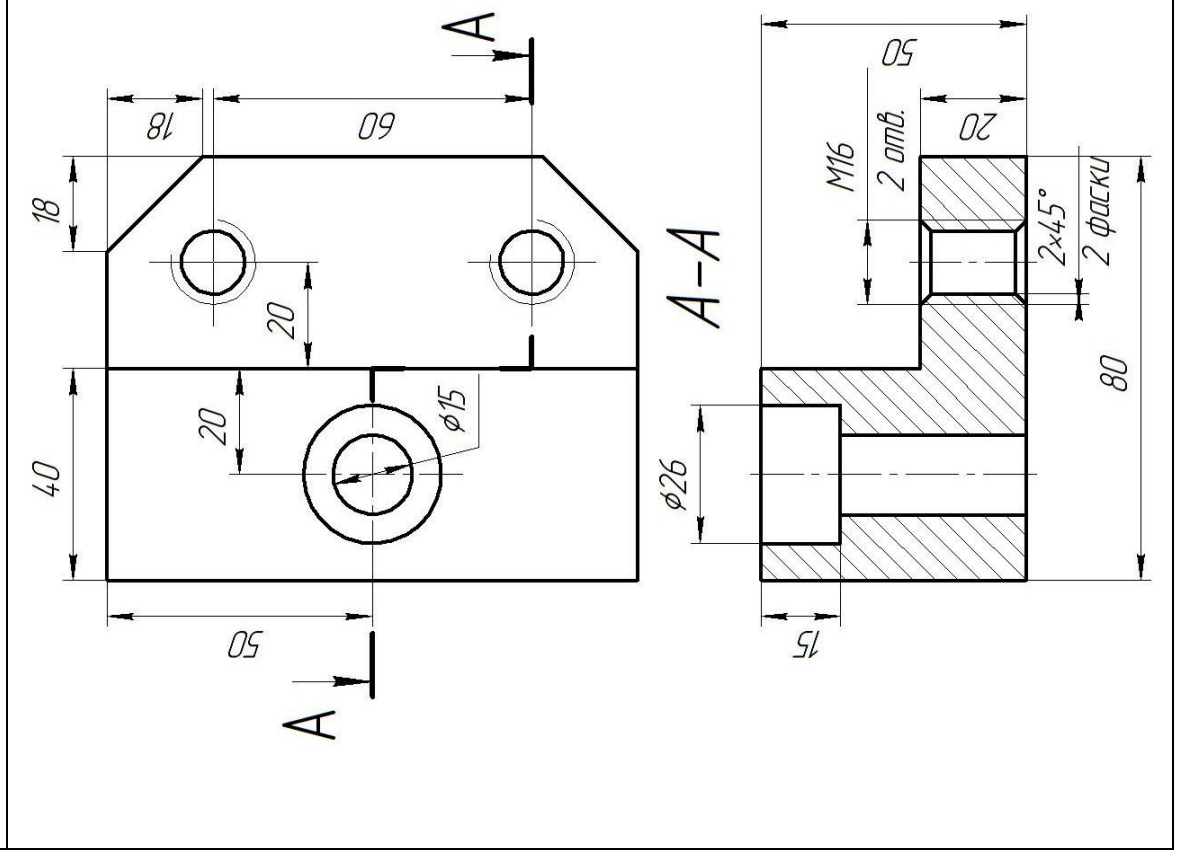

Variant 8

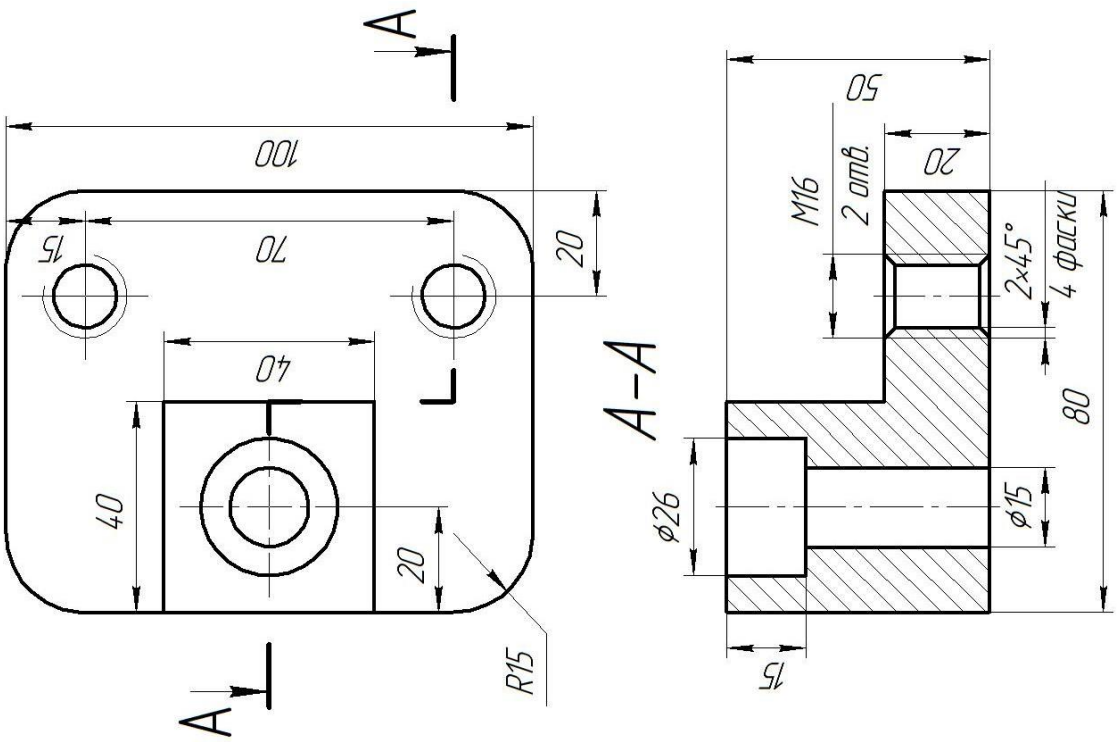

Variant 9

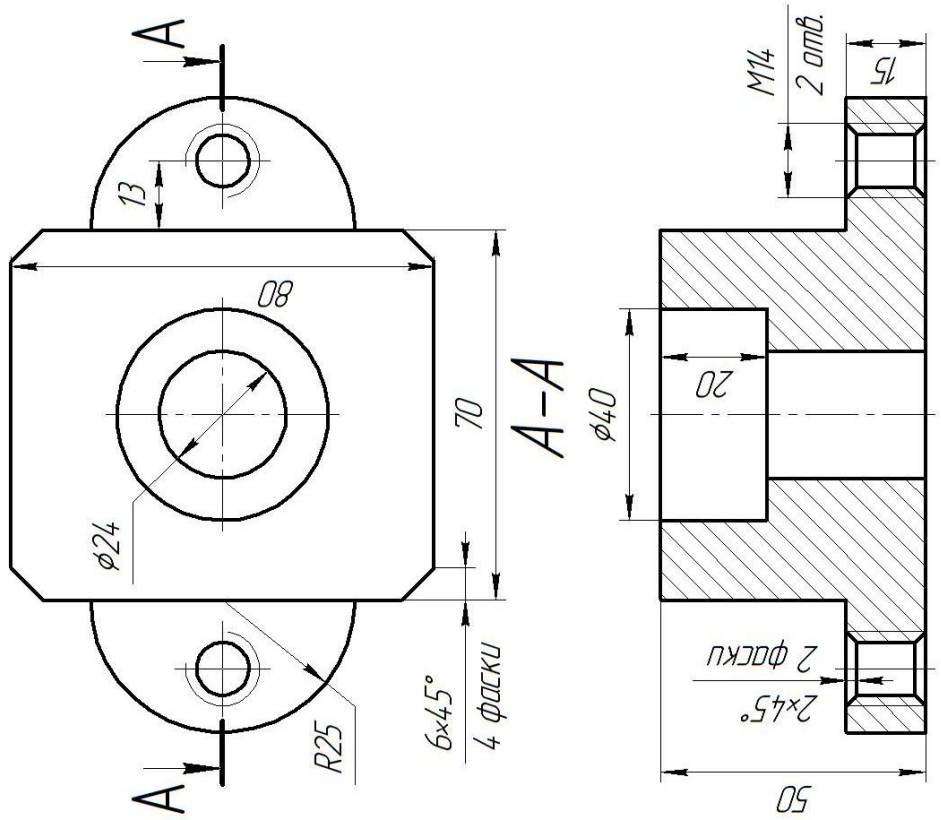

Variant 11	Variant 10
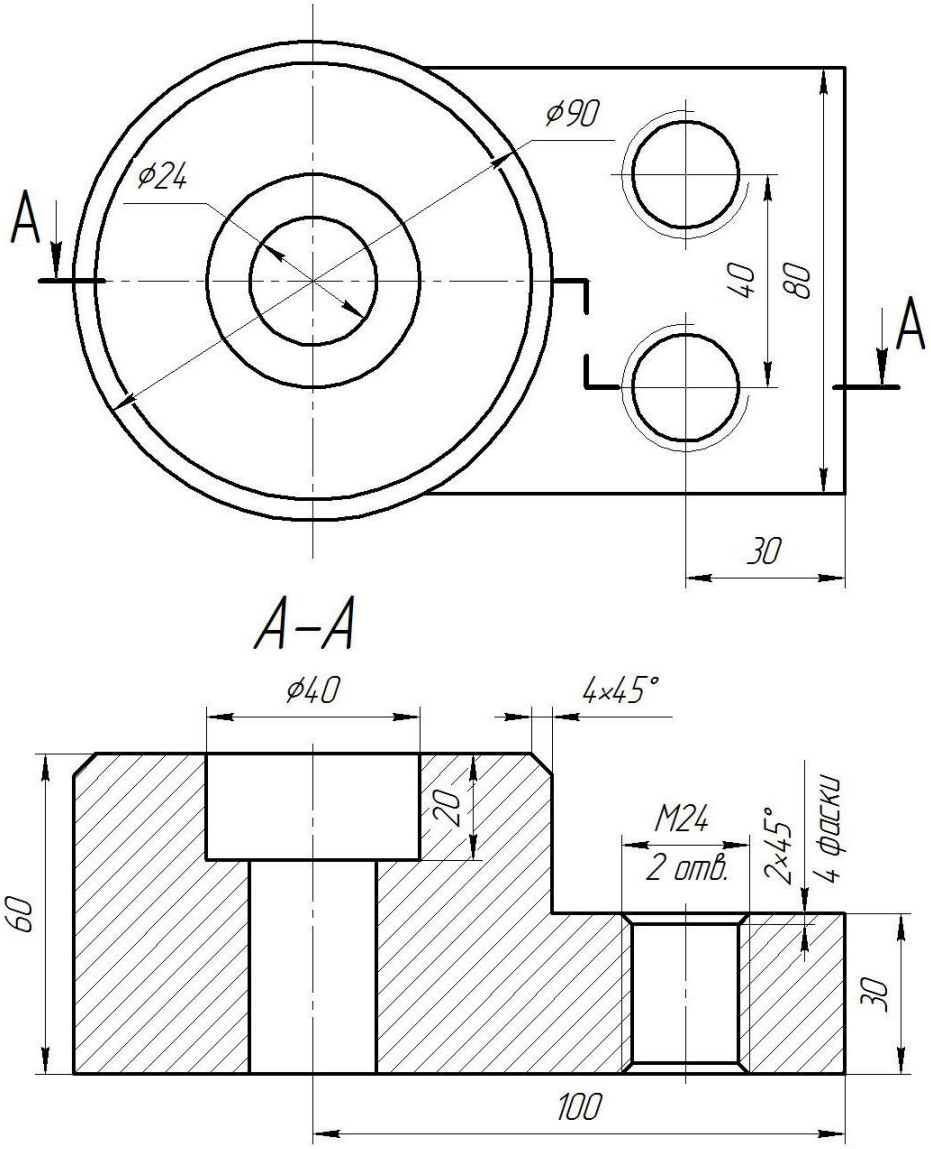	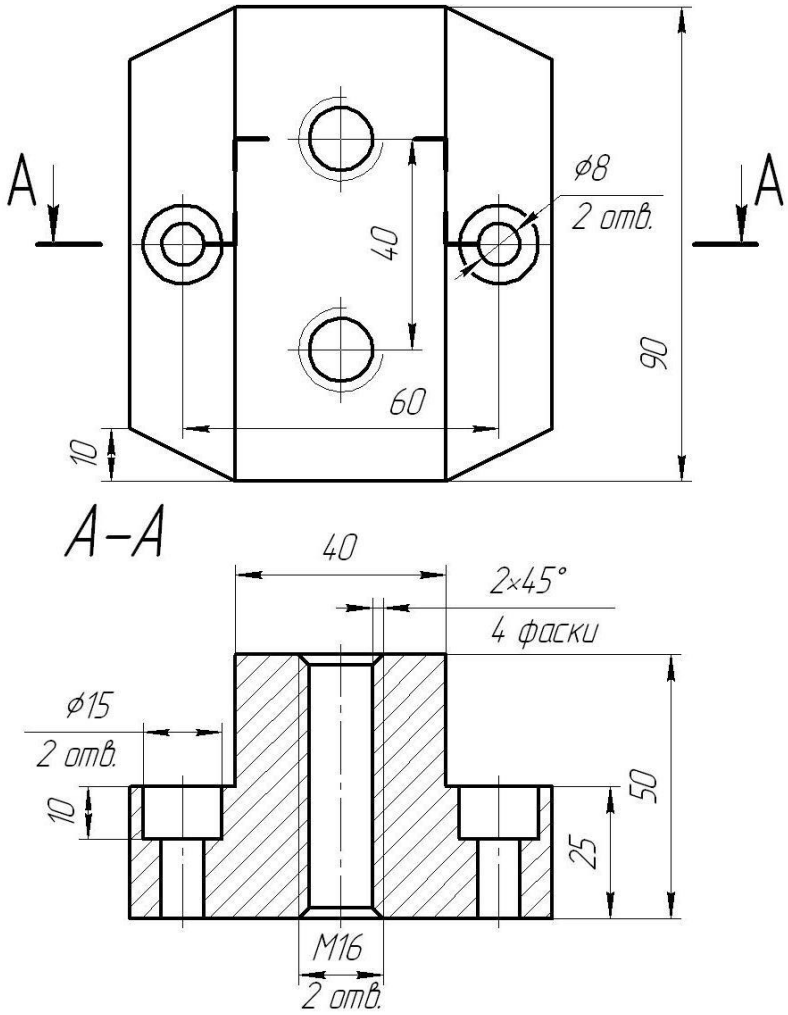

Variant 12

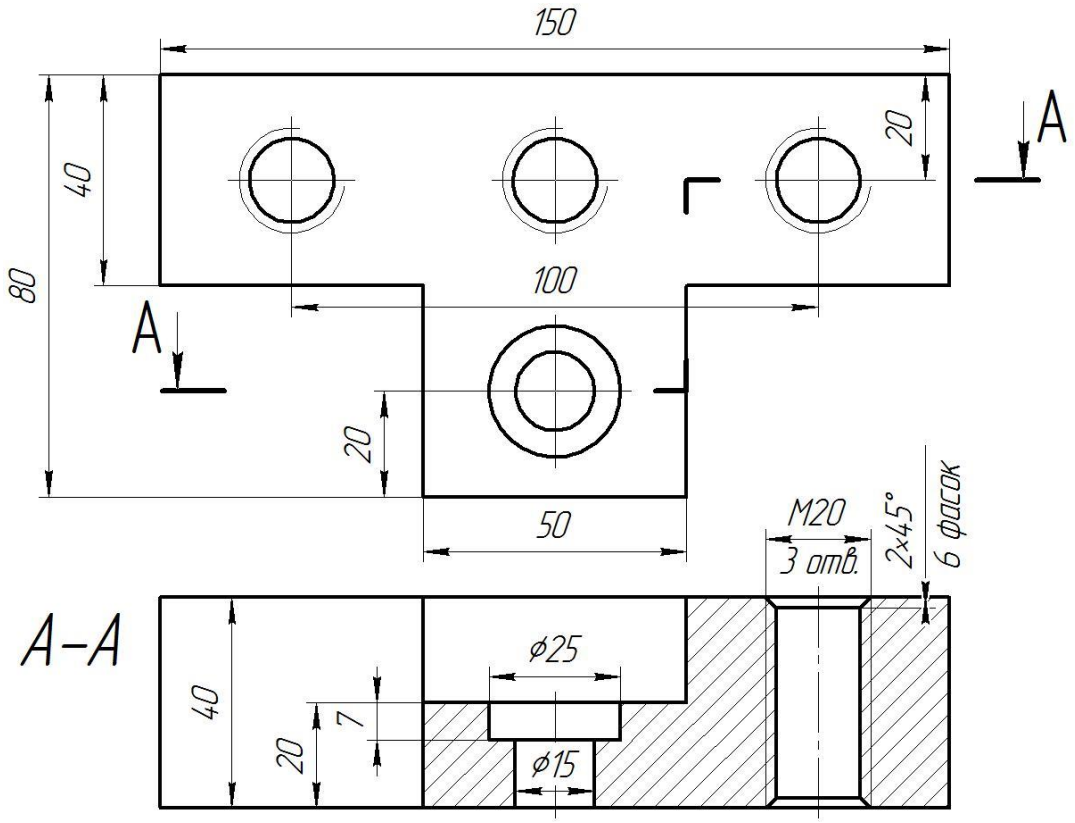

Variant 13

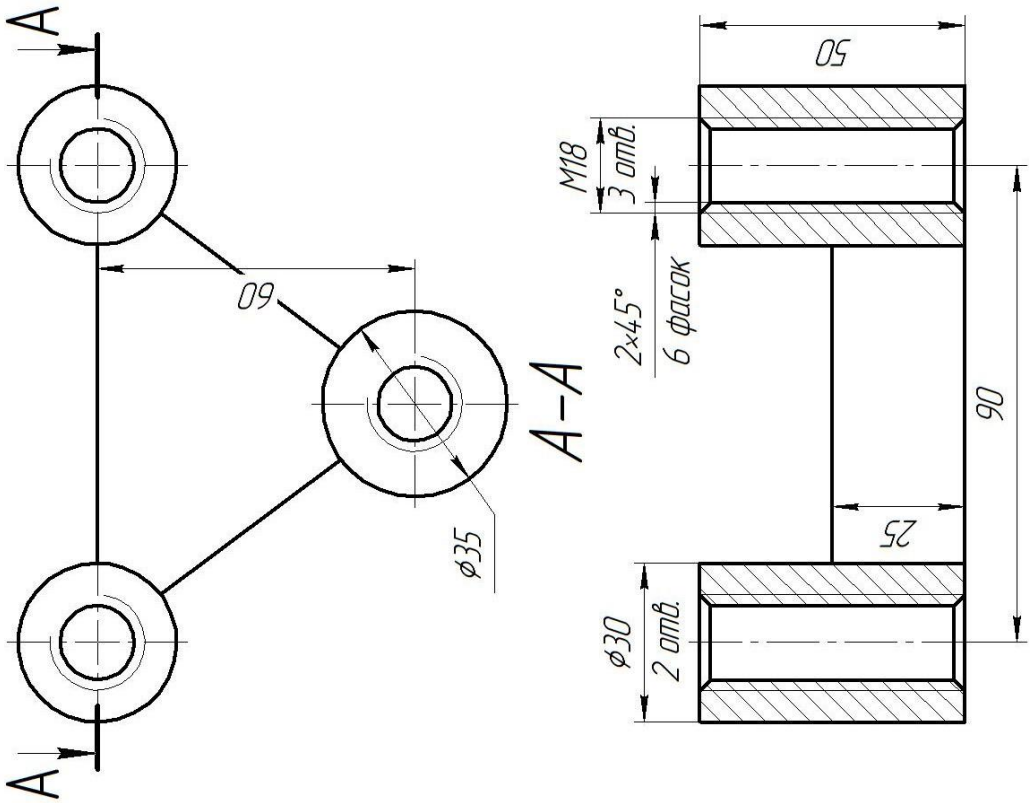

Variant 15	Variant 14
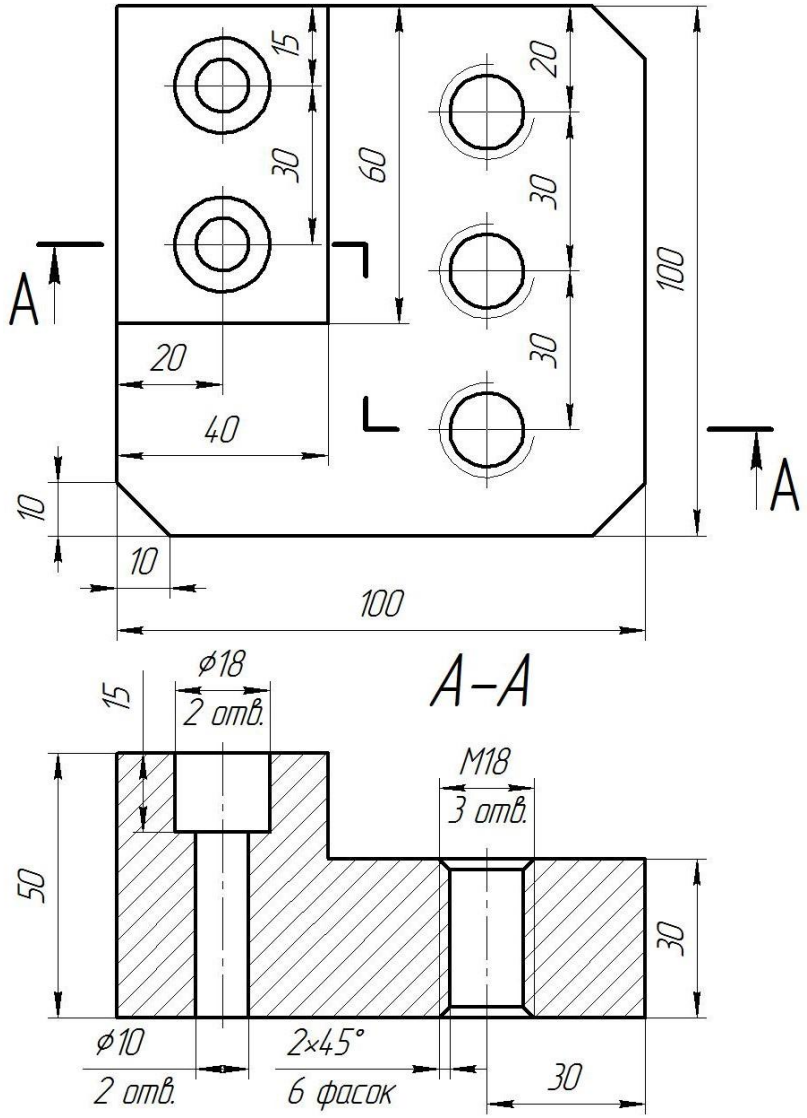	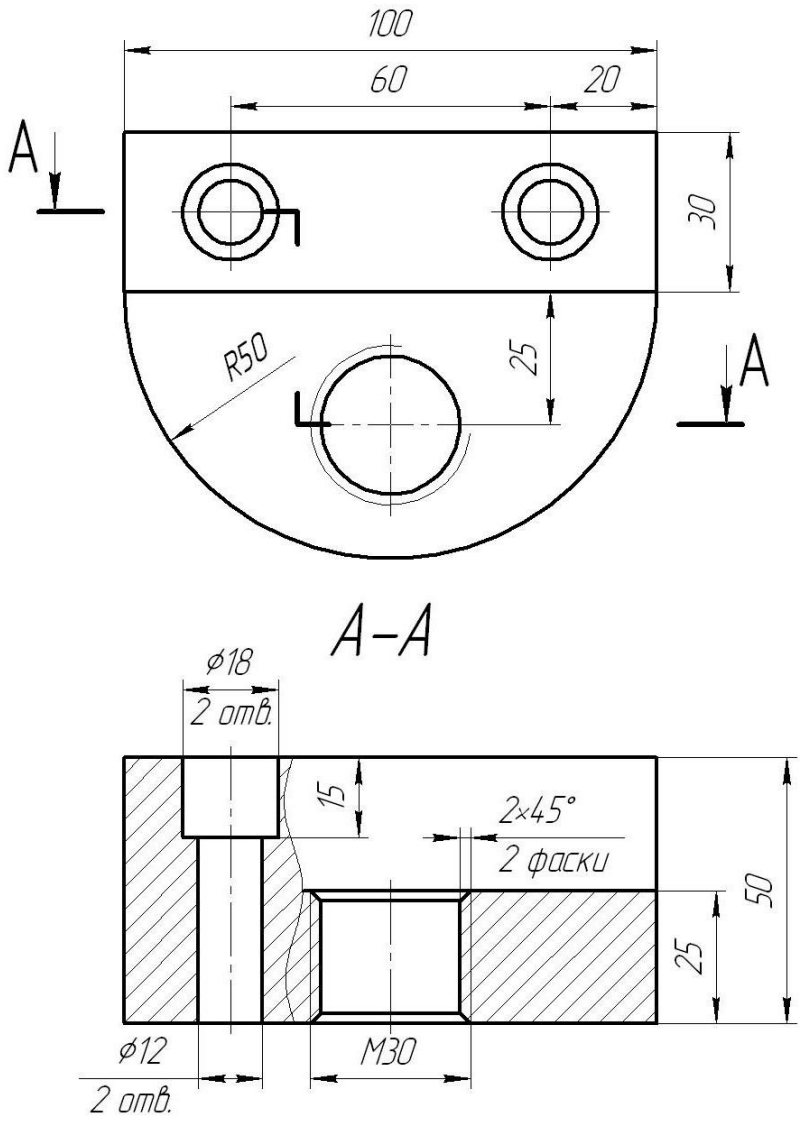

ADDITION D

VARIANTS OF TASKS OF DETAILS OF THE TYPE "HULL"

Variant 1	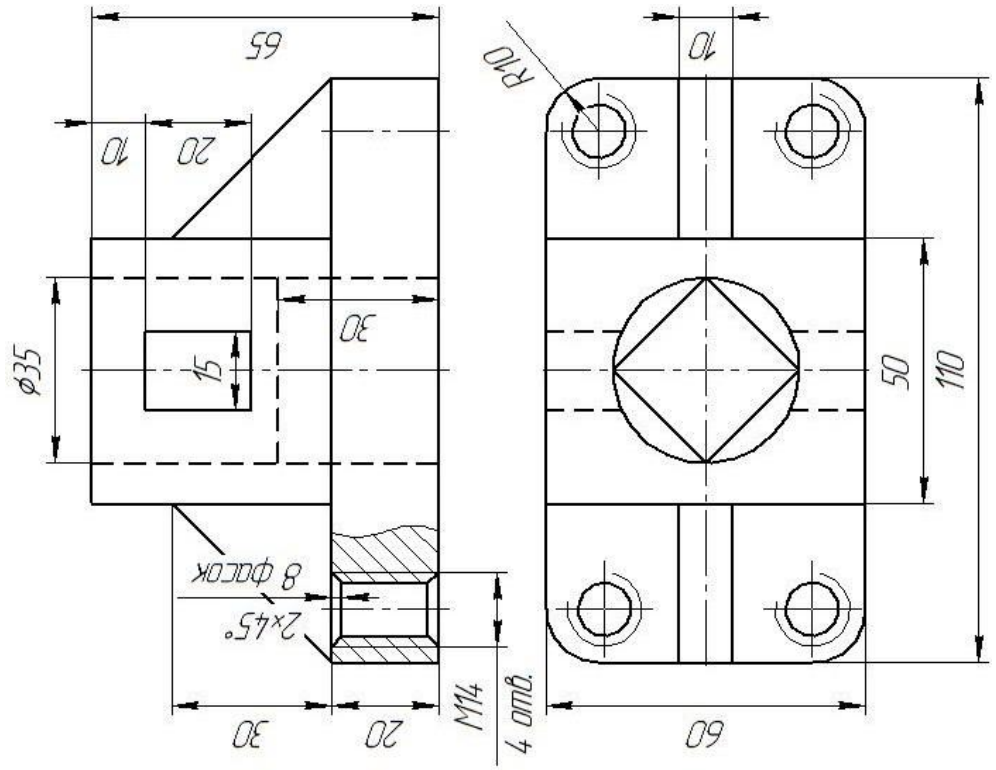

Variant 2	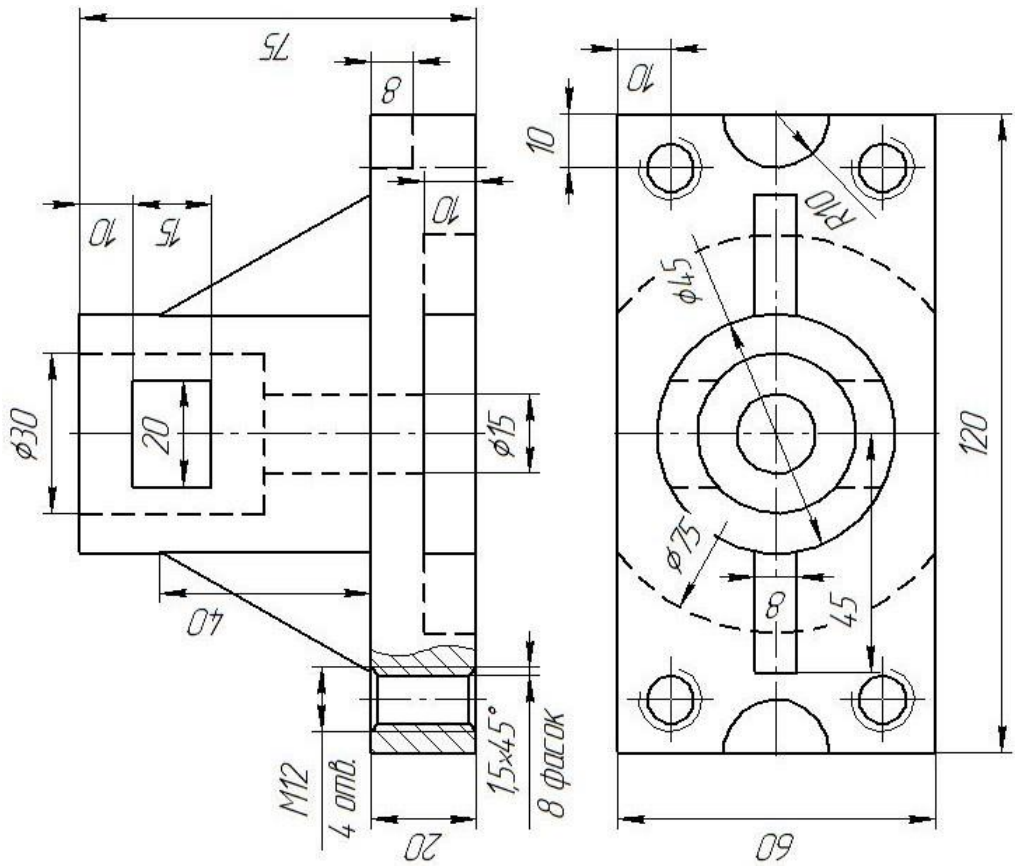
Variant 3	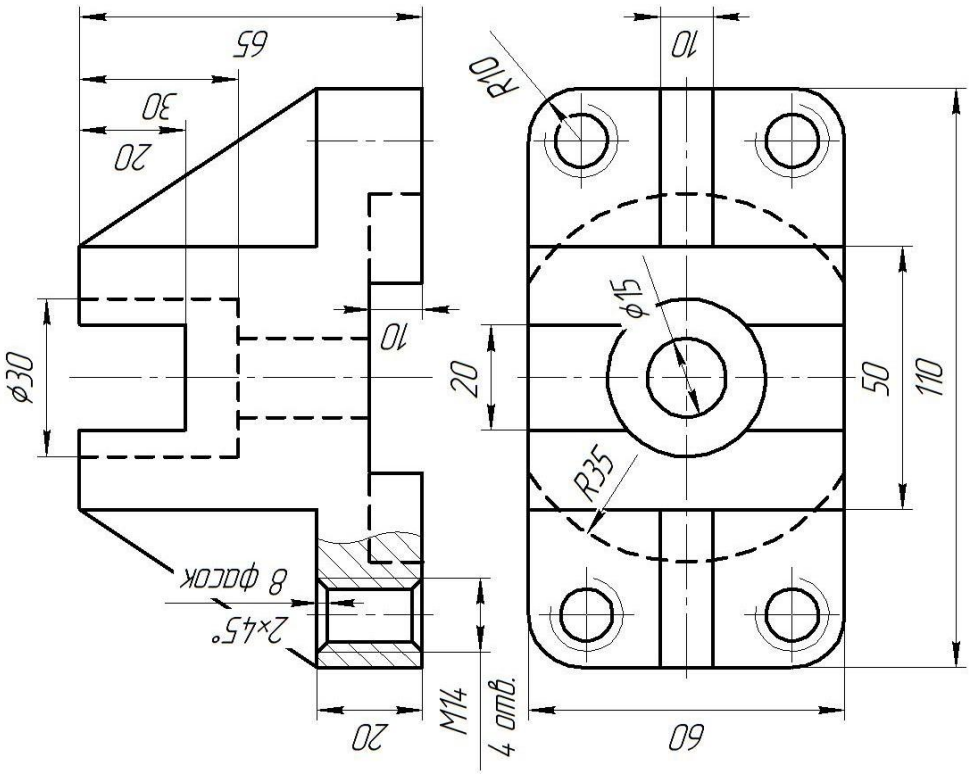

Variant 4	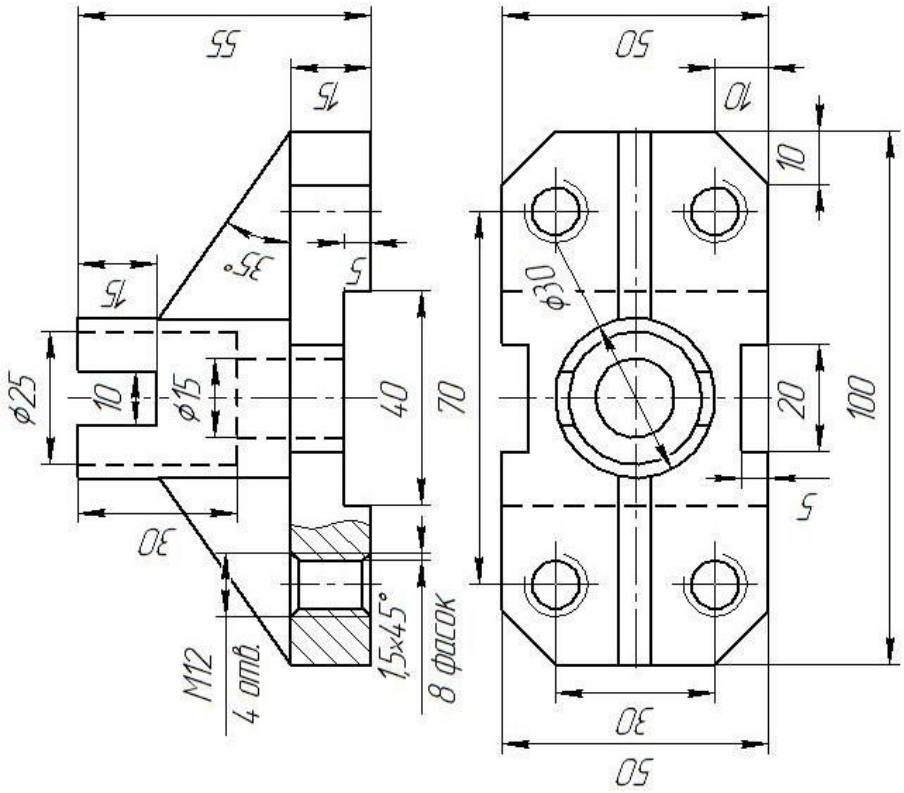
Variant 5	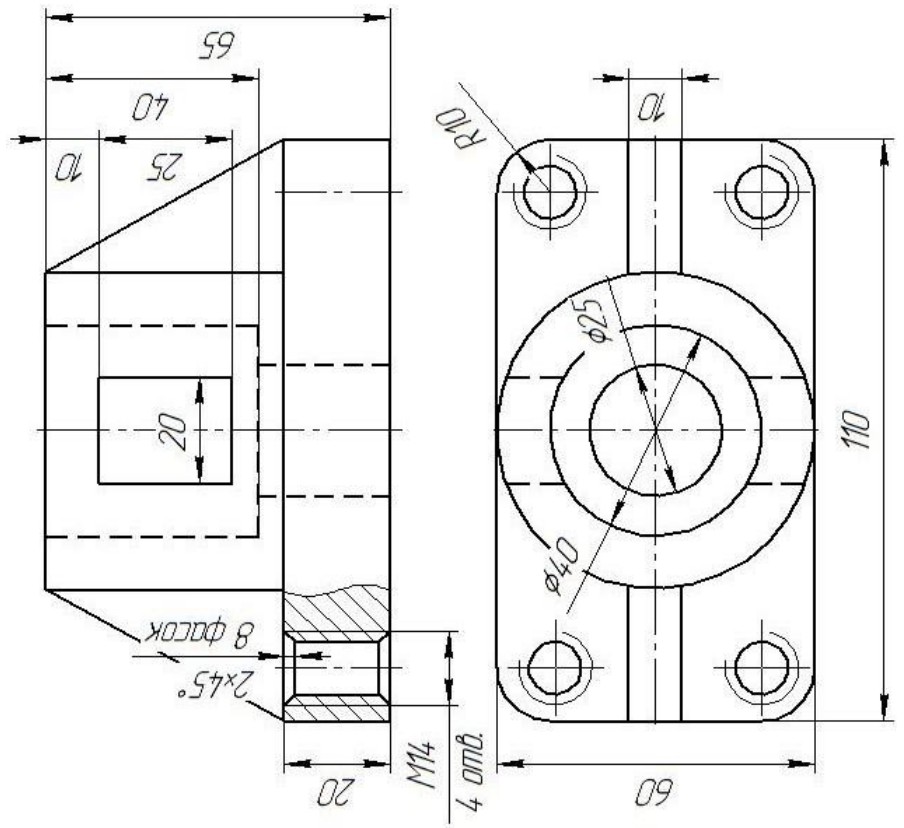

Variant 6	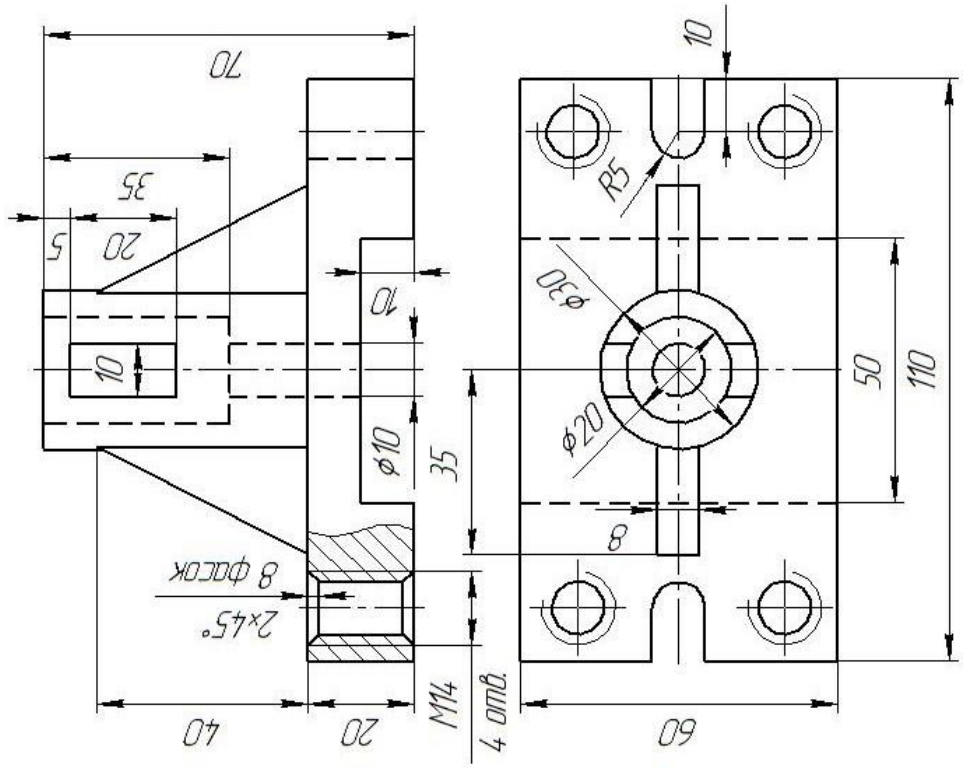
Variant 7	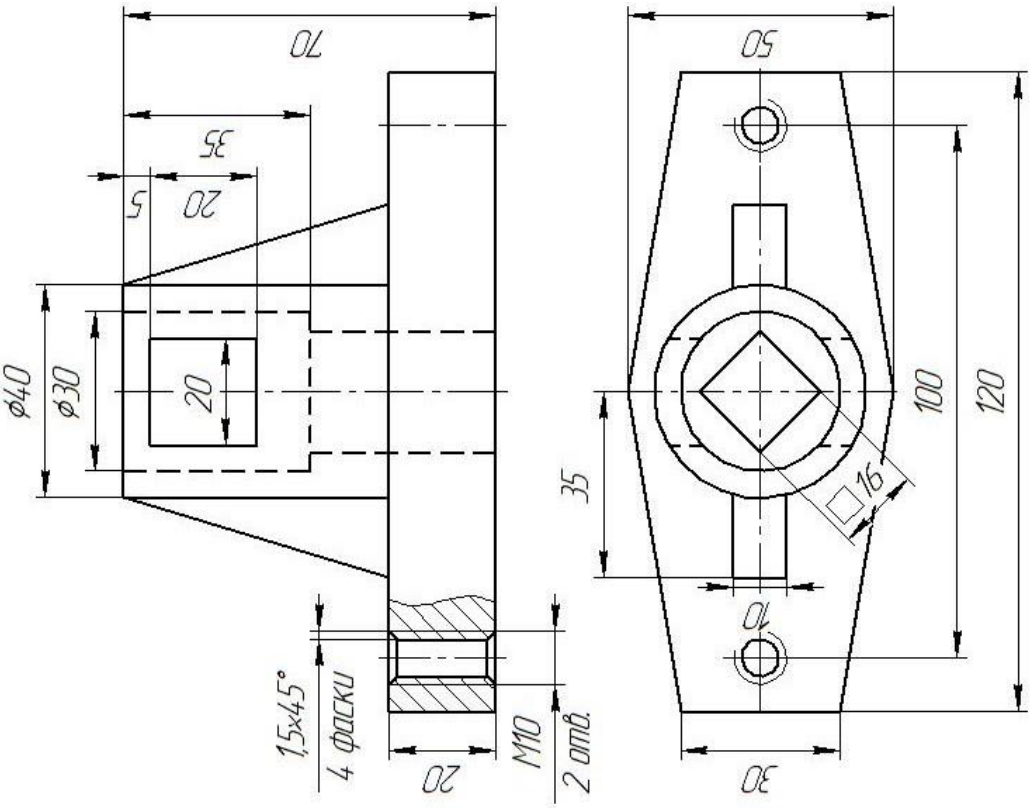

Variant 8	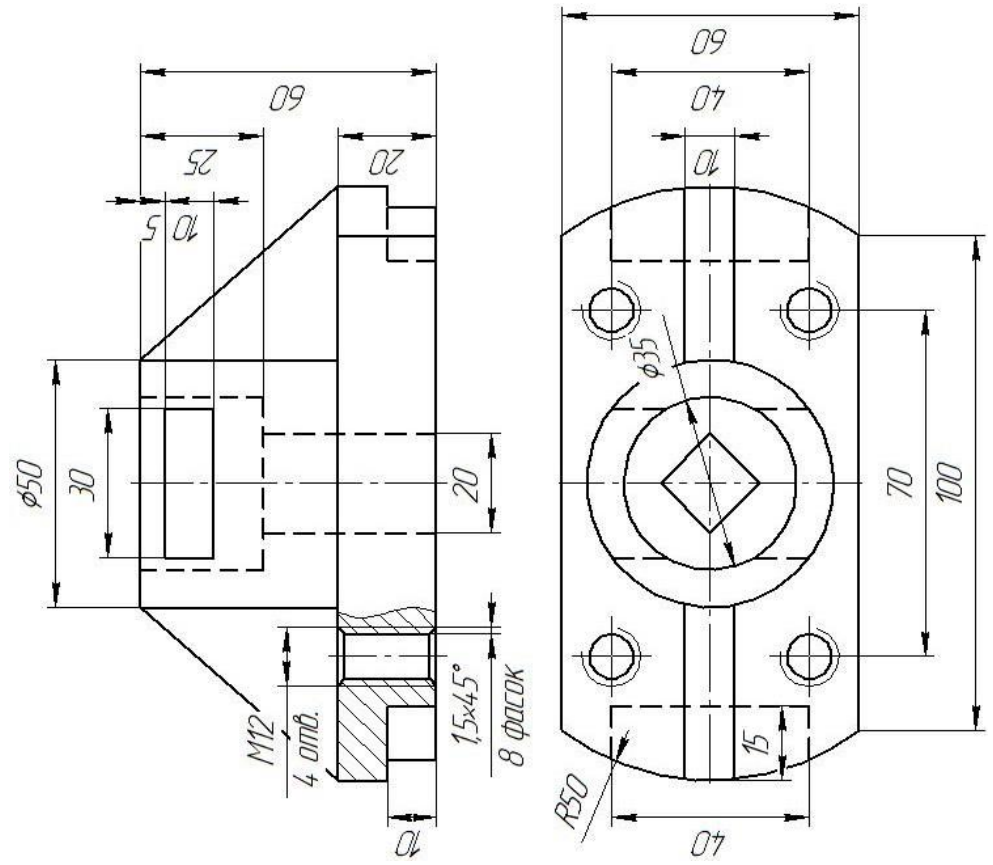
Variant 9	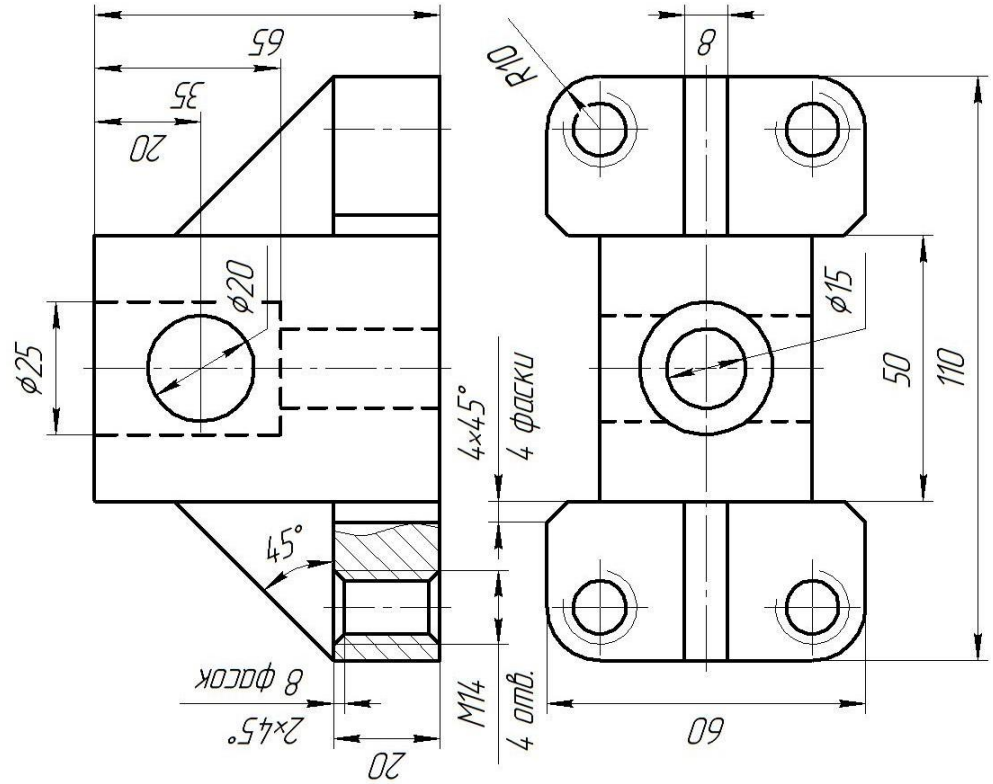

Variant 10	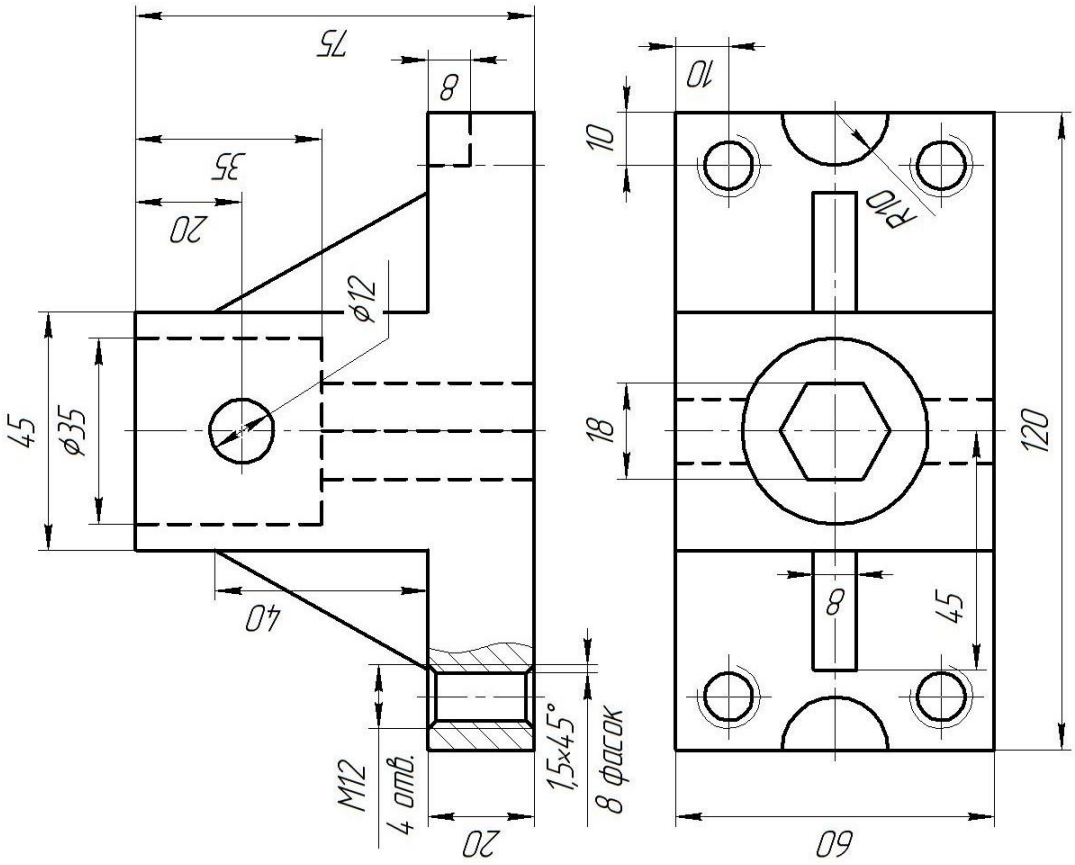
Variant 11	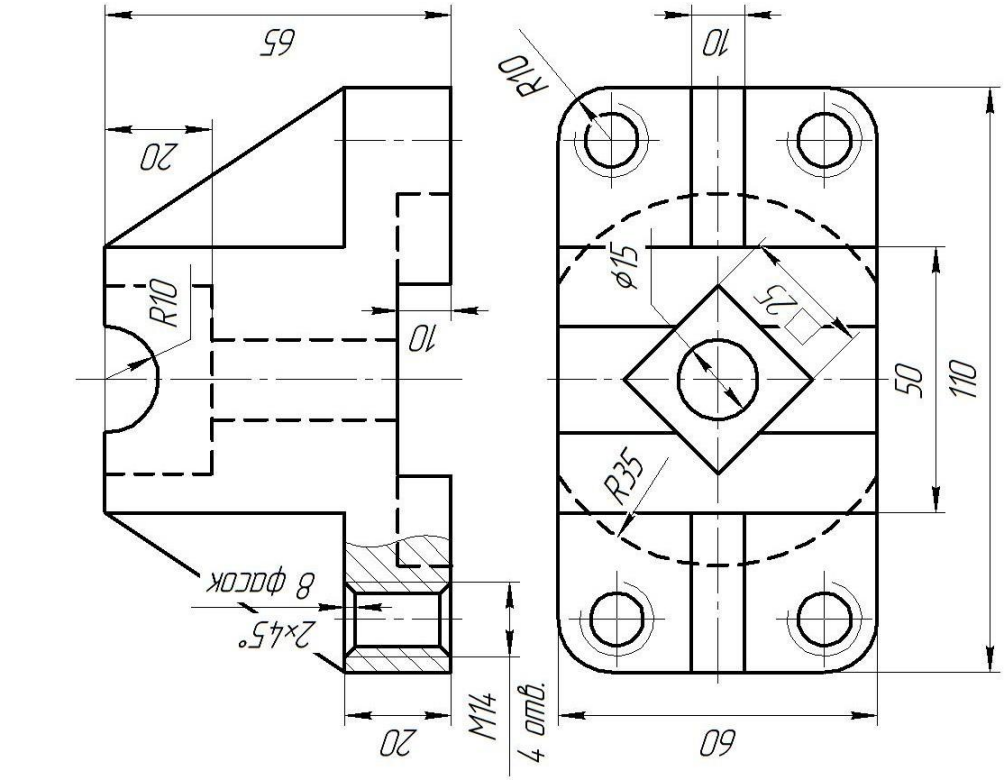

Variant 12	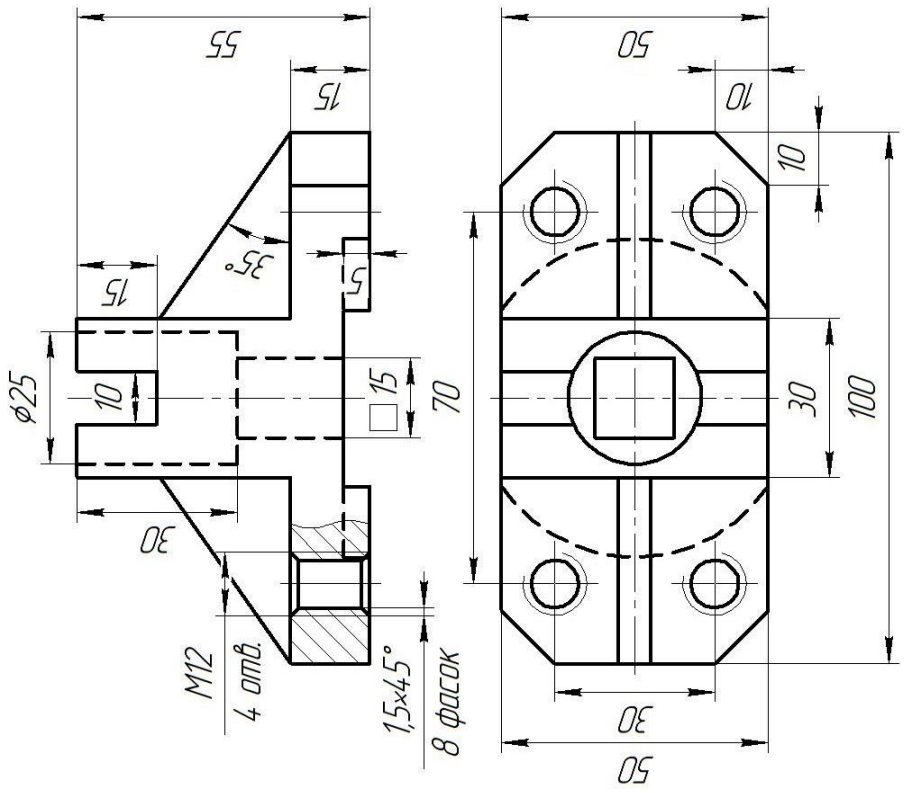
Variant 13	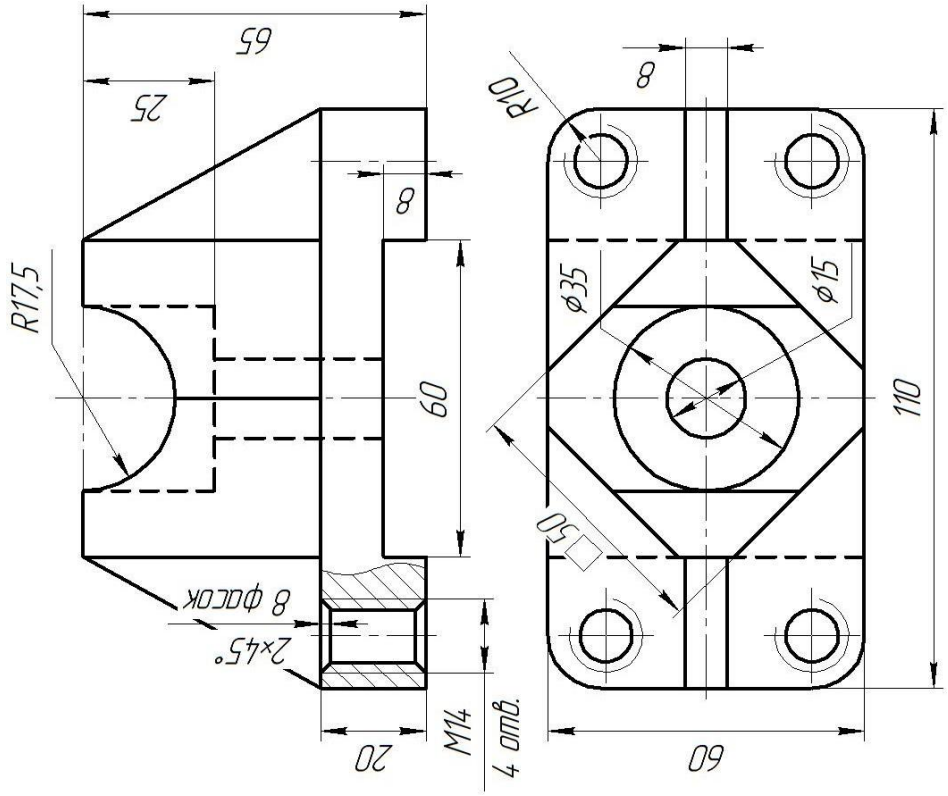

Variant 14

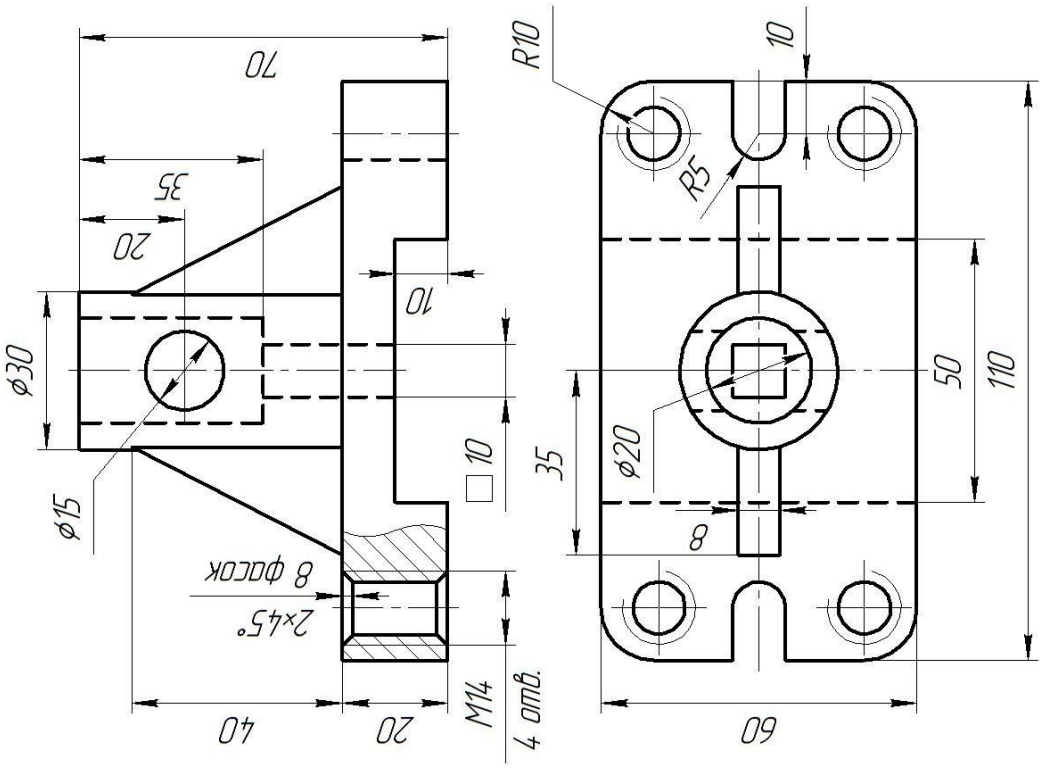

Variant 15

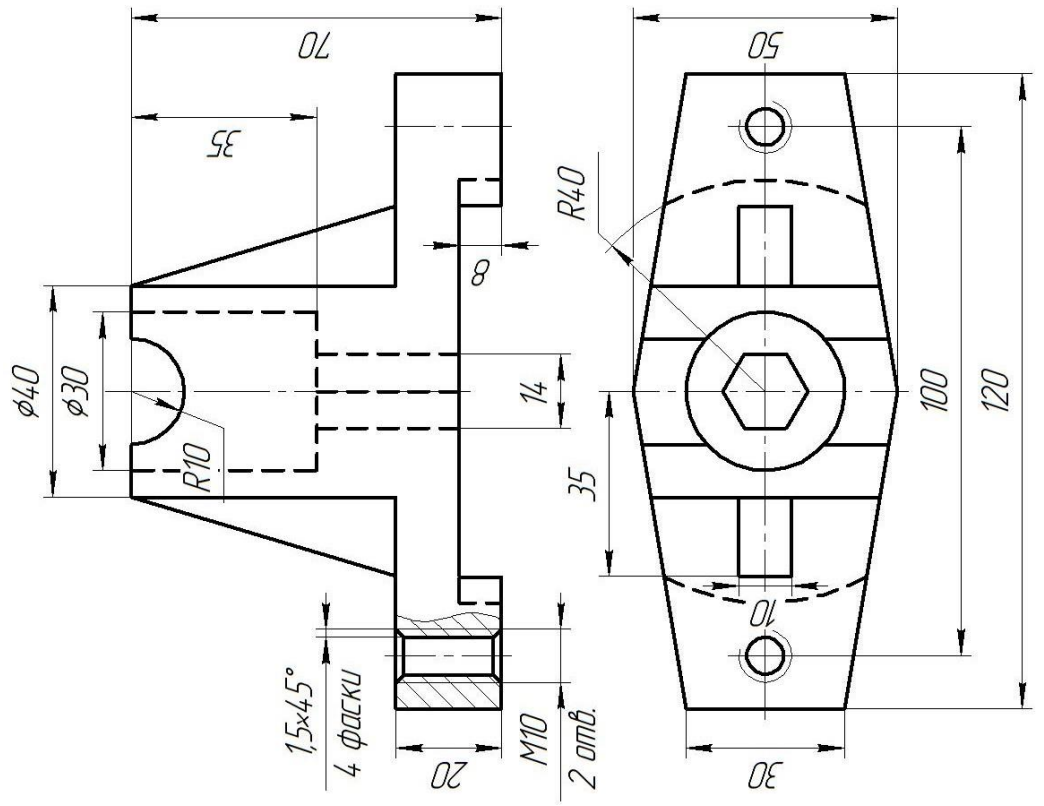

ADDITION E

TYPICAL VARIANT OF ASSEMBLY DRAWING

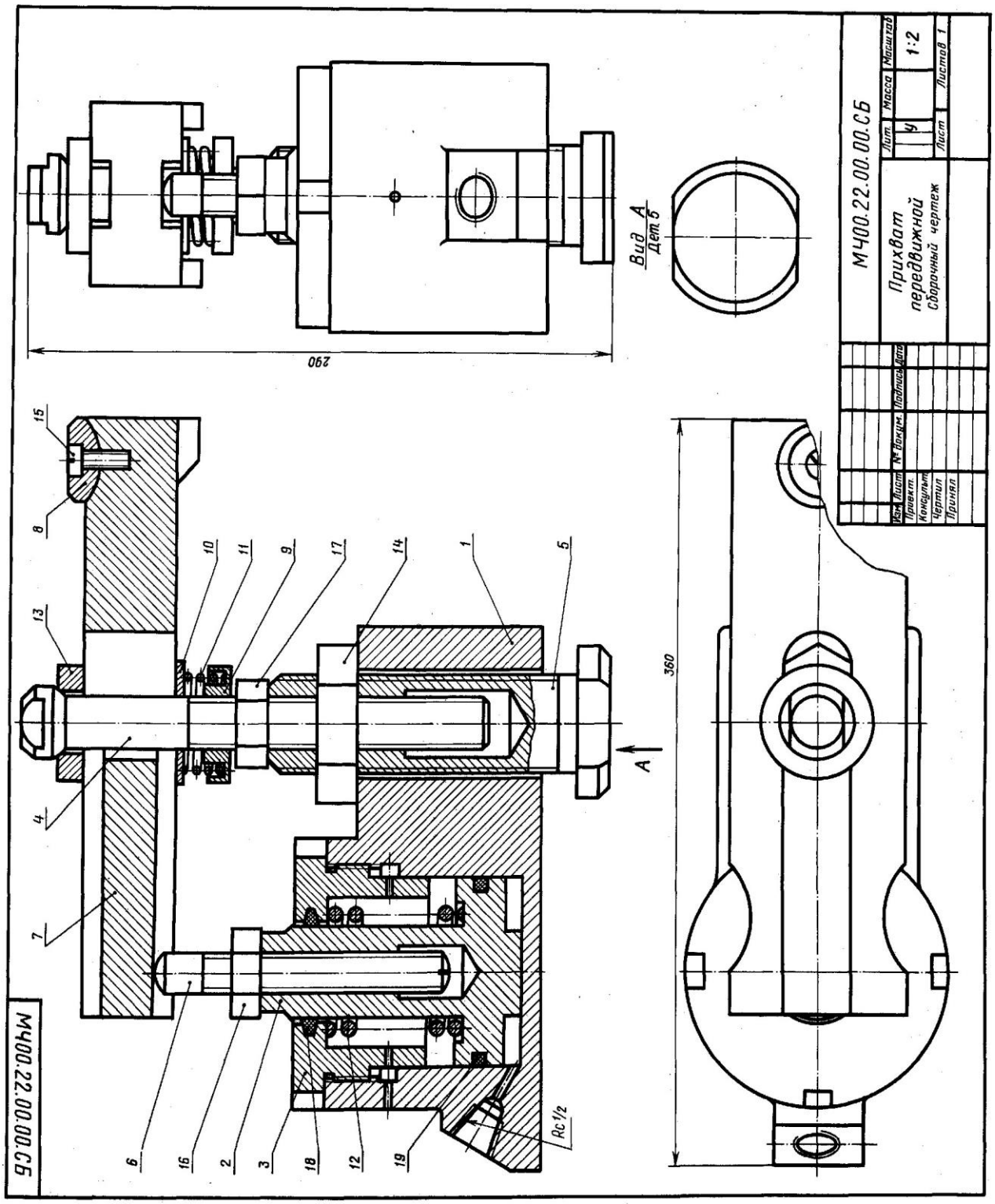

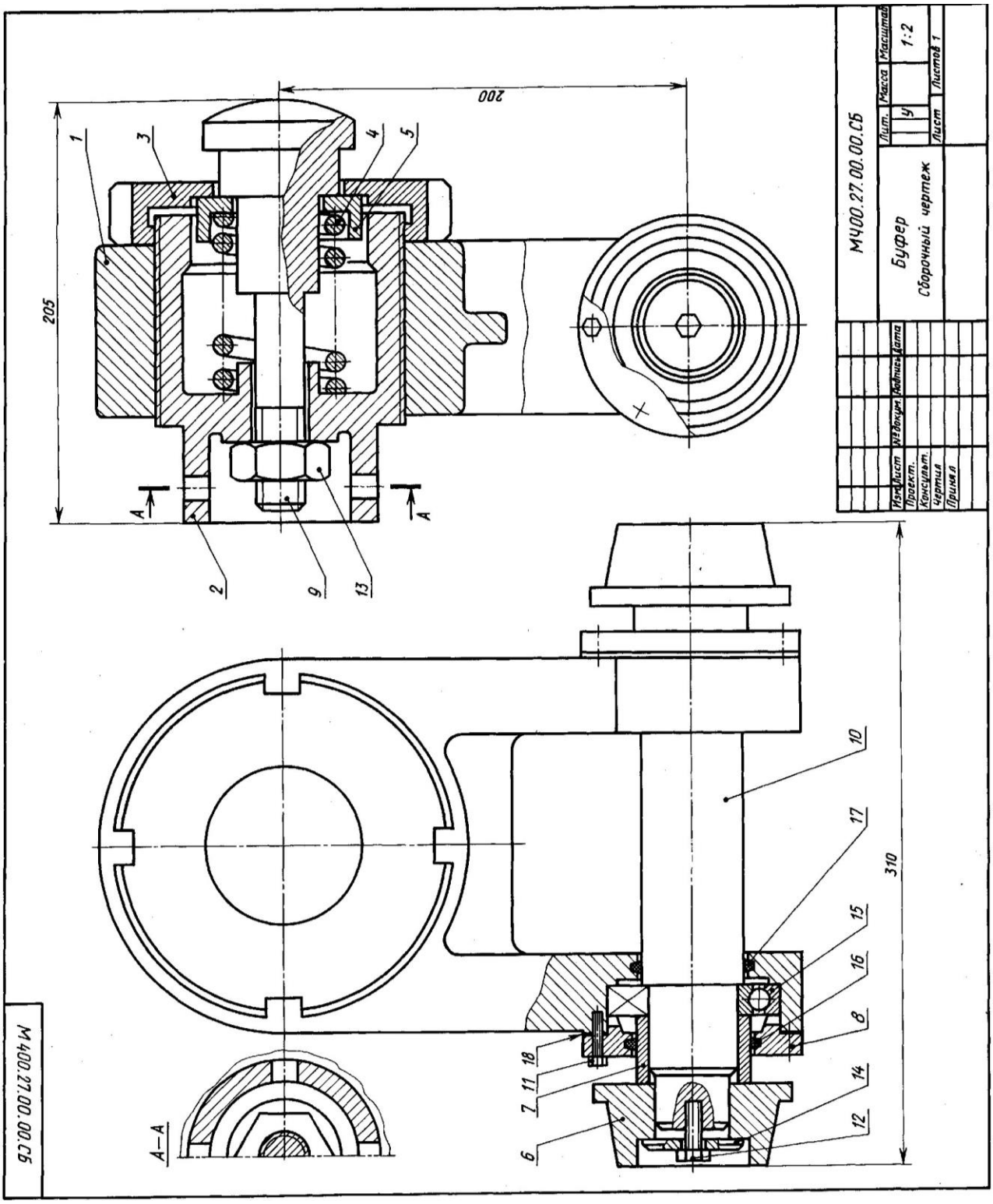
200
205
1
3
4
5
2
9
13
A
A
A–A
10
17
15
16
8
18
11
7
6
14
12
310
М400.27.00.00.СБ
М400.27.00.00.СБ
Буфер
Сборочный чертеж
Лит.
Масса
Масштаб
1:2
Лист
Листов 1
Разраб.
Пров.
Т.контр.
Н.контр.
Утв.
Изм.
Лист
№ докум.
Подпись
Дата

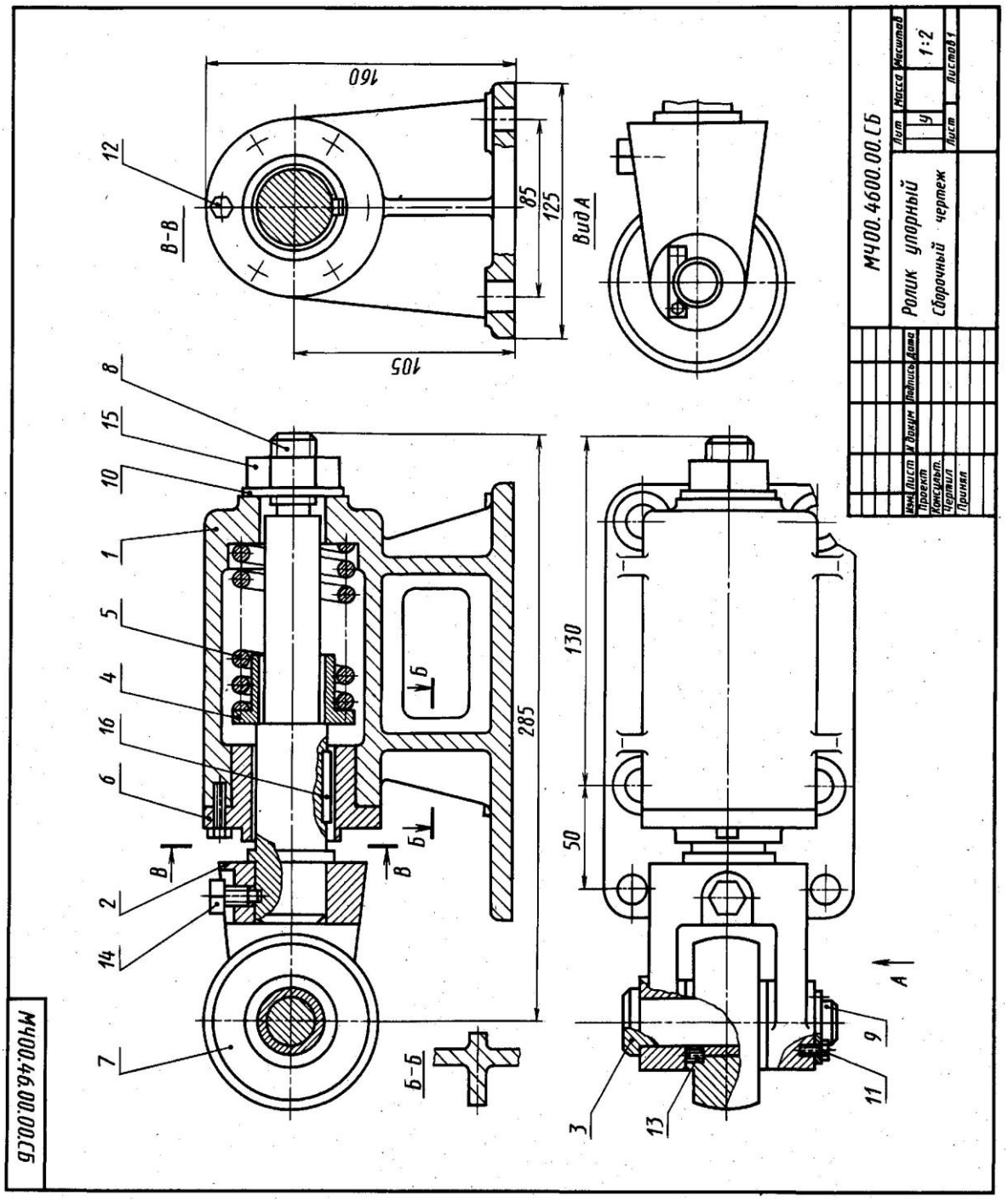
МЧ00.4600.00.СБ
Ролик упорный
Сборочный чертеж
Лит
Масса
Масштаб
1:2
Лист
Листов 1
Изм.
Лист
N докум
Подпись
Дата
Проект.
Консульт.
Чертил
Принял
МЧ00.46.00.00.СБ
В-В
Вид А
Б-Б
160
105
85
125
285
130
50
1
2
3
4
5
6
7
8
9
10
11
12
13
14
15
16

ADDITION F

AN EXAMPLE OF THE EXECUTION AND DESIGN OF LABORATORY WORK

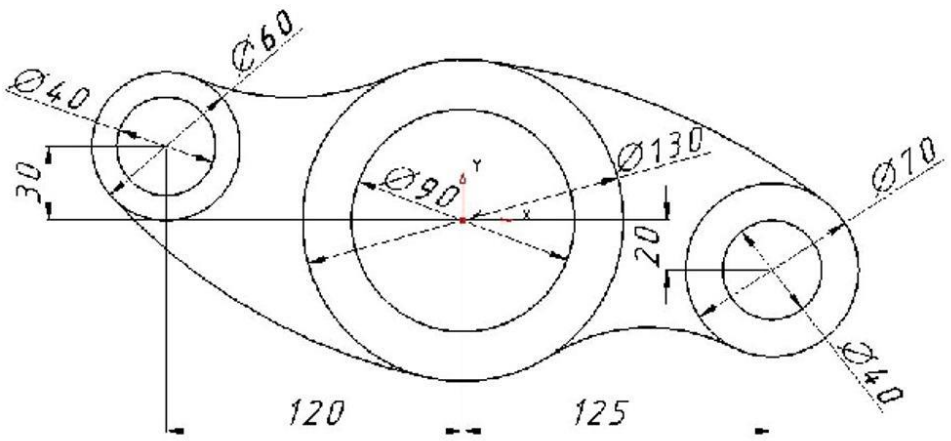

					NU CN 01.00.001		
Ch.	Sheet	№ docum.	Signature	Date	Lever	Lit.	Weight / Scale
Developed		Velborn D.					
Checked		Bakster P.				Sheet	Sheets
T. control							
Approved						MMB-221	

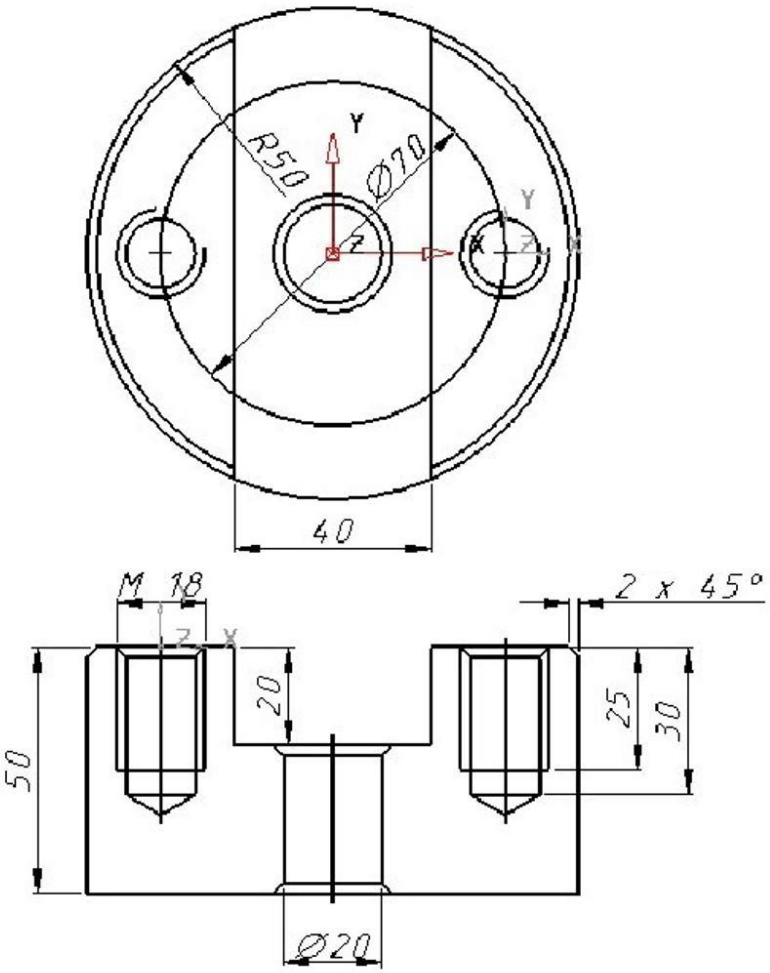

					NU CN 01.00.002		
Ch.	Sheet	№ docum.	Signature	Date	Disk	Lit.	Weight / Scale
Developed		Velborn D.					
Checked		Bakster P.				Sheet	Sheets
T. control							
Approved						MMB-221	

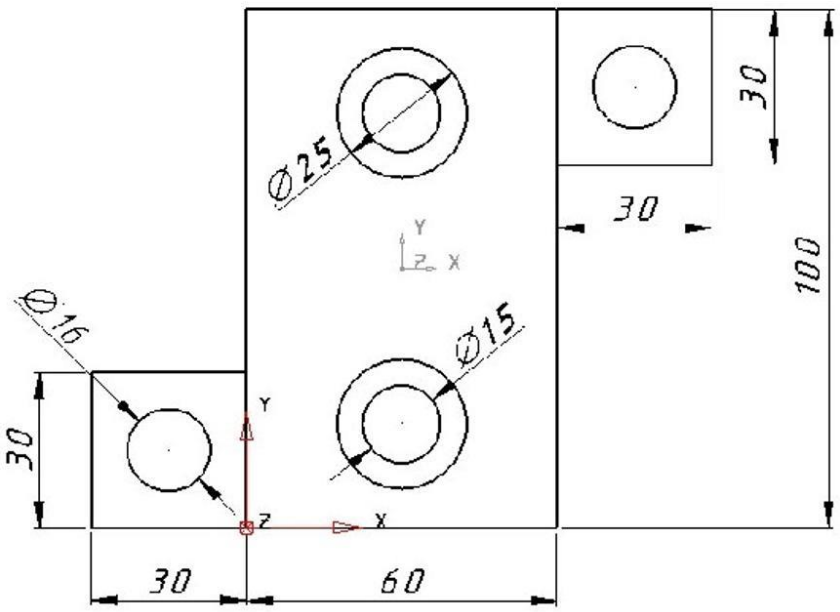

					NU CN 01.00.003	
Ch.	Sheet	№ docum.	Signature	Date	Plate	Lit. / Weight / Scale
Developed		Velborn D.				
Checked		Bakster P.				Sheet / Sheets
T. control						
Approved						MMB-221

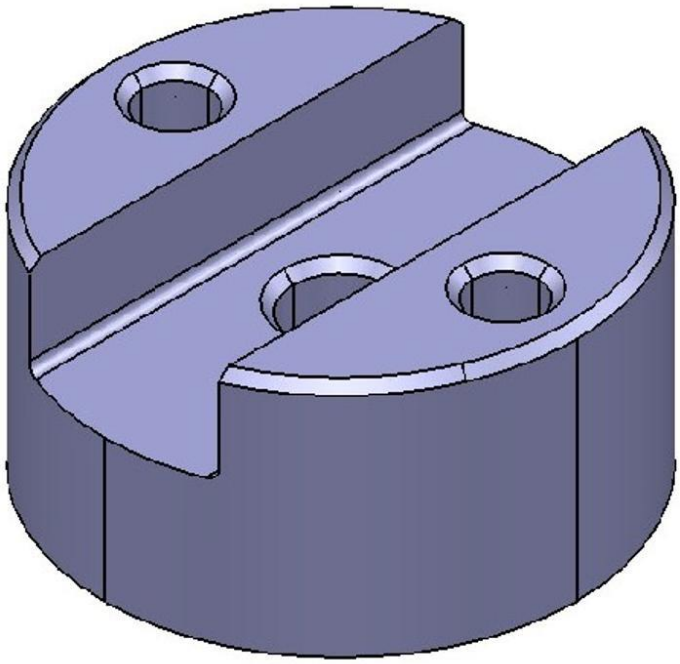

					NU CN 01.00.005		
						Lit.	Weight	Scale
Ch.	Sheet	№ docum.	Signature	Date	Disk			
Developed		Velborn D.						
Checked		Bakster P.				Sheet	Sheets	
T. control							
						MMB-221	
Approved							

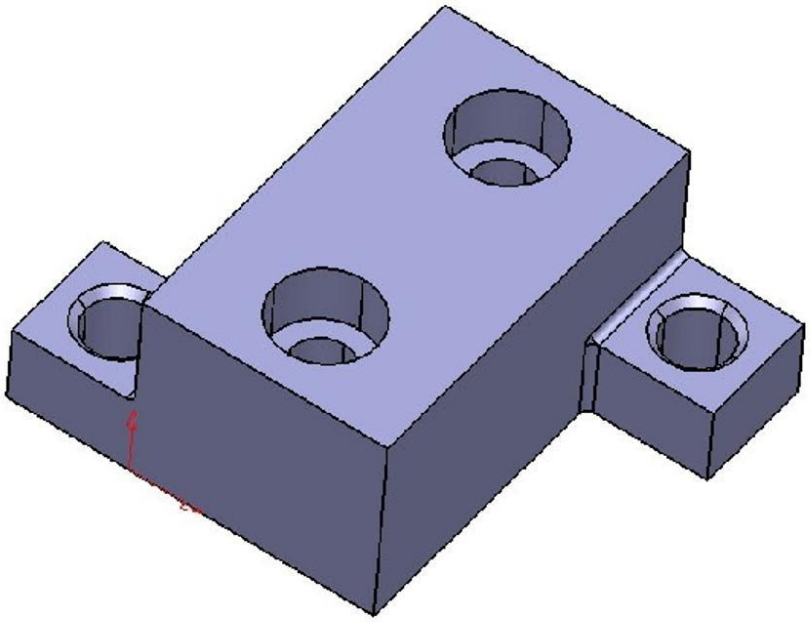

					NU CN 01.00.006			
						Lit.	Weight	Scale
Ch.	Sheet	№ docum.	Signature	Date	Plate			
Developed		Velborn D.						
Checked		Bakster P.				Sheet	Sheets	
T. control								
						MMB-221		
Approved								

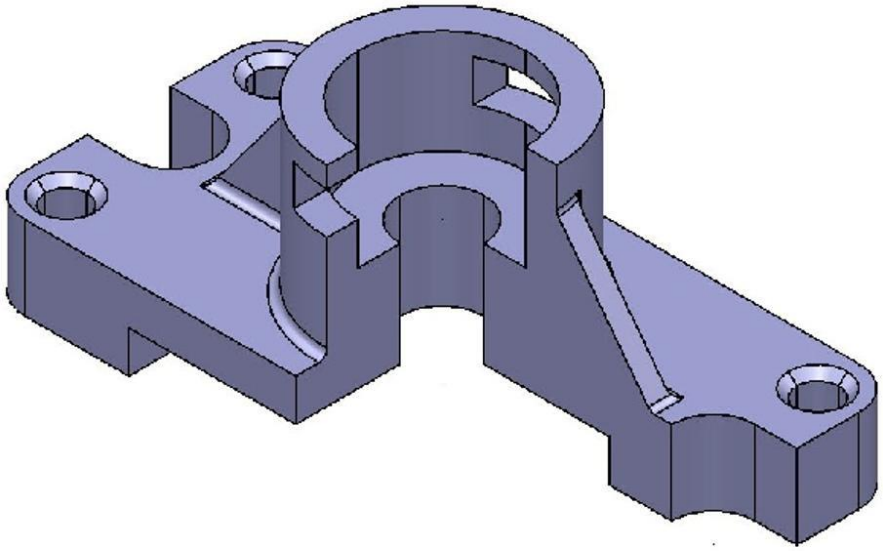

					NU CN 01.00.007		
						Lit.	Weight	Scale
Ch.	Sheet	№ docum.	Signature	Date	Hull			
Developed		Velborn D.					
Checked		Bakster P.				Sheet	Sheets
T. control							
						MMB-221	
Approved							

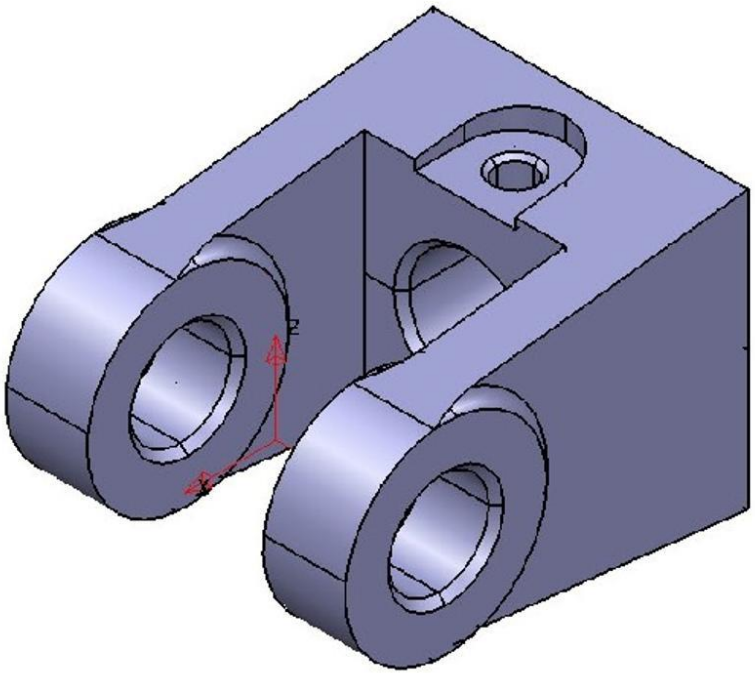

					NU CN 01.00.009			
						Lit.	Weight	Scale
Ch.	Sheet	№ docum.	Signature	Date	Fork			
Developed		Velborn D.						
Checked		Bakster P.				Sheet	Sheets	
T. control								
						MMB-221		
Approved								

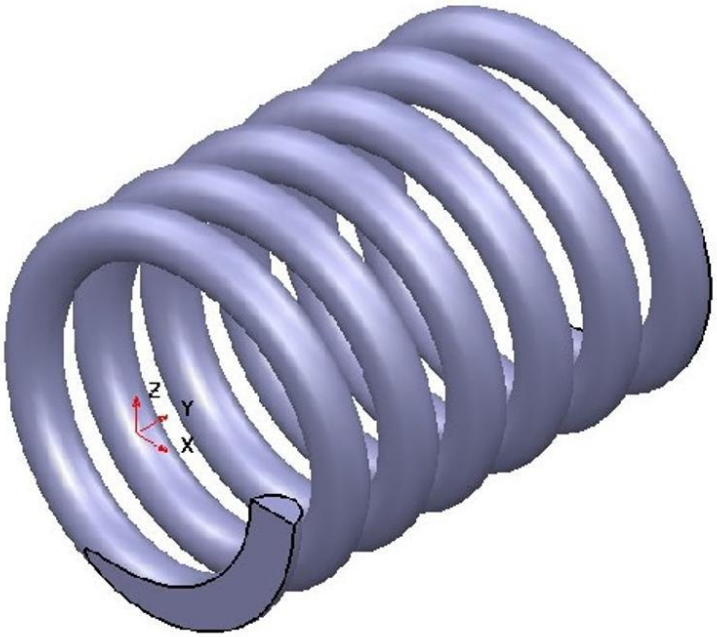

					NU CN 01.00.010		
						Lit.	Weight	Scale
Ch.	Sheet	№ docum.	Signature	Date	Spring			
Developed		Velborn D.						
Checked		Bakster P.				Sheet	Sheets	
T. control							
						MMB-221	
Approved							

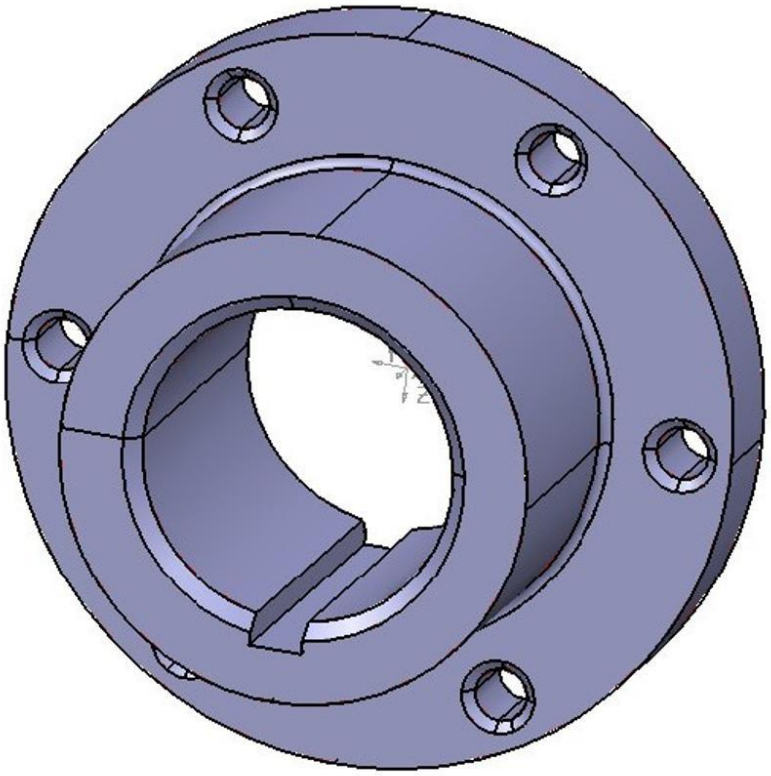

					NU CN 01.00.011		
Ch.	Sheet	№ docum.	Signature	Date	Cover	Lit.	Weight / Scale
Developed		Velborn D.					
Checked		Bakster P.				Sheet	Sheets
T. control							
Approved						MMB-221	

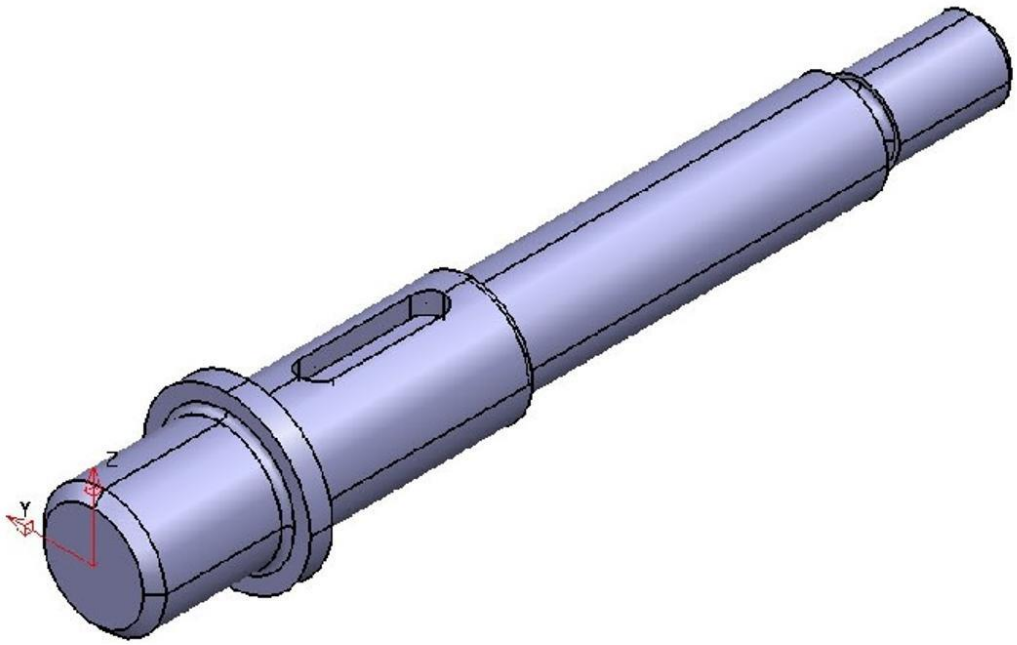

					NU CN 01.00.012		
						Lit.	Weight	Scale
Ch.	Sheet	№ docum.	Signature	Date	Shaft			
Developed		Velborn D.						
Checked		Bakster P.				Sheet	Sheets	
T. control							
						MMB-221	
Approved							

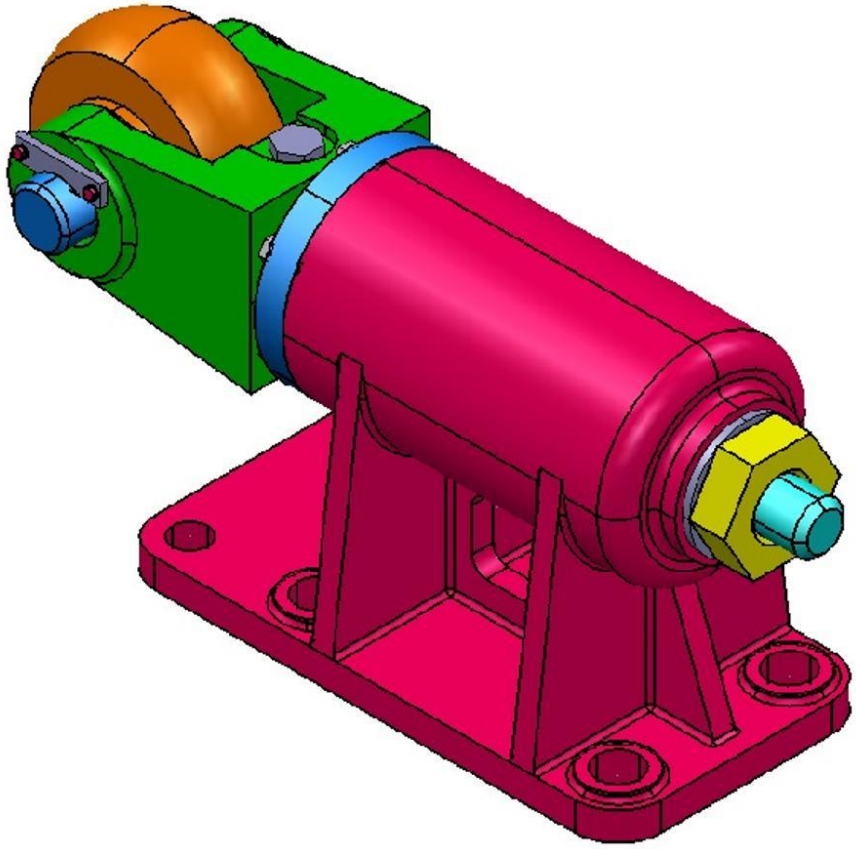

					NU CN 01.00.013		
						Lit.	Weight	Scale
Ch.	Sheet	№ docum.	Signature	Date	Rollers			
Developed		Velborn D.					
Checked		Bakster P.				Sheet	Sheets
T. control							
						MMB-221	
Approved							

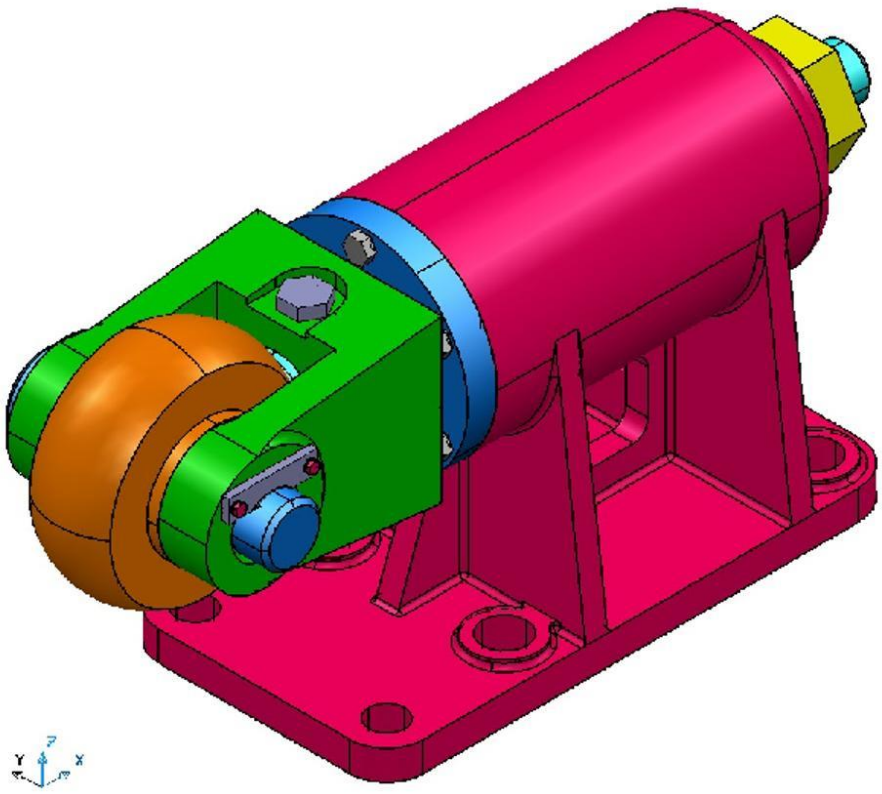

					NU CN 01.00.014			
Ch.	Sheet	№ docum.	Signature	Date	Rollers	Lit.	Weight	Scale
Developed		Velborn D.						
Checked		Bakster P.				Sheet	Sheets	
T. control								
Approved						MMB-221		

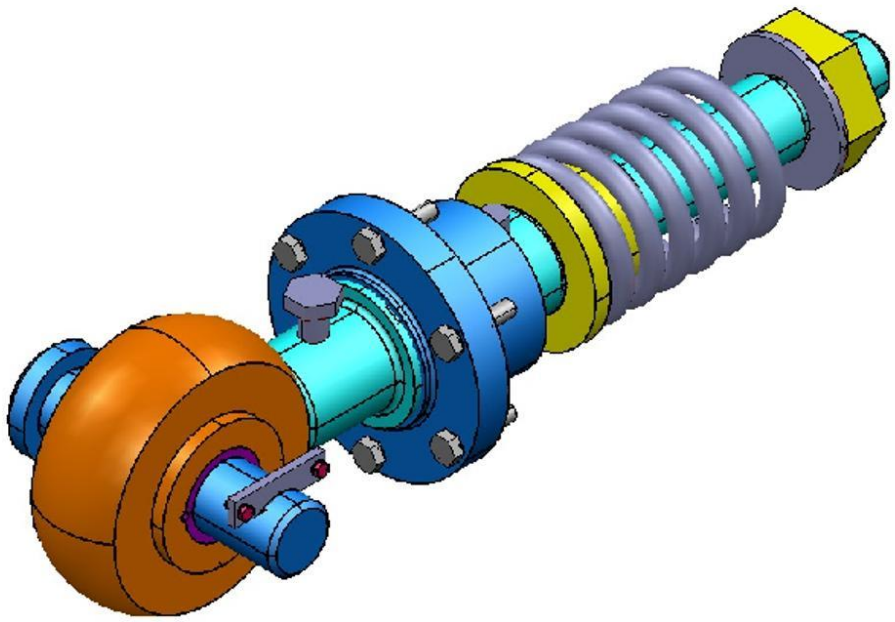

Items 1, 2 not shown

					NU CN 01.00.015		
						Lit.	Weight	Scale
Ch.	Sheet	№ docum.	Signature	Date	Rollers			
Developed		Velborn D.					
Checked		Bakster P.				Sheet	Sheets
T. control							
						MMB-221	
Approved							

CONTENT

Introduction 3
History about the Delcam software 4
Tasks for calculation and graphic work 7
RECOMMENDED BOOKS 9
ADDITION A Variants of tasks of "Lever" type parts 10
ADDITION B Variants of task details of type "Disk" 11
ADDITION C Variants of tasks of parts of the "Plate" type 19
ADDITION D Variants of tasks of details of the type "Hull" 27
ADDITION E Typical variant of assembly drawing 35
ADDITION F An example of the execution and design of laboratory work 38